# AIRPLANE PARTS CATALOG

## ARCHER III

**PA-28-181**
**(SERIAL NUMBERS 2843001 AND UP)**

## CARD 1 OF 2

# PIPER AIRCRAFT, INC.

**PART NUMBER: 761-898**

**1A1**

**REVISED: JUNE 10, 2007**

Island Enterprises

Published by
Technical Publications Group

©Piper Aircraft, Inc.
2926 Piper Drive
Vero Beach, Florida 32960
U.S.A.

Member of GAMA
General Aviation
Manufacturers Association

**1A2**

Island Enterprises

AEROFICHE EXPLANATION AND REVISION STATUS

The Parts Catalog information in this set of Aerofiche cards is arranged in accordance with general specifications of Aerofiche adopted by the General Aviation Manufacturer's Association.

Conversion of Aerofiche alpha/numeric code numbers:
First number is the Aerofiche card identifier.
Letter is the horizontal line reference per card.
Second number is the vertical line reference per card.
Example: 2J16 = Aerofiche card number two of given set, Grid location J16.

REVISIONS

The information compiled in this Aerofiche Parts Catalog is kept current by revisions distributed periodically. Each revision is a complete Aerofiche card replacement and supersedes Aerofiche cards of the same number in the set.

Revisions to this PA-28-181 (serial numbers 2843001 and up) Parts Catalog issued July 10, 2004 are as follows:

| Effectivity | Publication Date | Aerofiche Card Effectivity |
|---|---|---|
| ORG 979001 | September 1, 1997 | 1 and 2 |
| PR 990923 | September 23, 1999 | 1 and 2 |
| PR 030310 | March 10, 2003 | 1 and 2 |
| CR 040710 | July 10, 2004 | 1 and 2 |
| PR 050610 | June 10, 2005 | 1 and 2 |
| PR 050910 | September 10, 2005 | 1 and 2 |
| PR 051210 | December 10, 2005 | 1 and 2 |
| PR 060910 | September 10, 2006 | 1 and 2 |
| CR061210 | December 10, 2006 | 1 and 2 |
| PR070310 | March 10, 2007 | 1 and 2 |
| PR070610* | June 10, 2007 | 1 and 2 |

* Please replace your existing Aerofiche cards dated 03/10/07 with these two aerofiche cards dated 06/10/07.

THIS PAGE INTENTIONALLY LEFT BLANK

# INTRODUCTION

This illustrated Parts Catalog provides simple, positive identification of replacement parts for the Model PA-28-181 Archer III (serial numbers 2843001 and up), manufactured by the Piper Aircraft, Inc. of Vero Beach, Florida.

**NOTE:** DO NOT USE THIS CATALOG FOR RIGGING AND INSTALLATION PURPOSES.

1. The catalog is divided into fourteen major sections as follows:
   a. Section I to XIII inclusive contains all replacement parts for the complete airplane. Each section is subdivided and each division includes an illustration and a parts listing.
   b. Section XIV is the Miscellaneous Group. This group includes an illustration and parts list for the Placards and Exterior Stencils, a listing of the Optional Equipment Kits, Repair kits and Special Tools, and a listing of Miscellaneous Hardware and Consumables.

2. The following is a brief explanation of the columns in the parts lists: (Refer to EXAMPLE below).
   a. The FIGURE AND ITEM NUMBER column indicates the illustration figure number and its part index number. EXAMPLE: (2-1), the 2 is the figure number and the 1 is the index number. The figure number appears only at the top of each parts list page.
   b. The PART NUMBER column contains the identifying number of the replacement part and this number must be shown on all parts orders.
   c. The NOMENCLATURE column indicates the part name. This name must be shown on all parts orders.
   d. The UNITS PER ASSY. (Number Required) column represents the total quantity of parts used per figure when the part is not indented and the quantity of parts used per assembly when the part is indented. The symbol AR listed in this column means As Required.
   e. The EFFECT FROM TO column indicates the part application by airplane serial number.

**EXAMPLE**

| Figure and Index Number | Part Number | Nomenclature | No. Req. | Serial Numbers Affected |
|---|---|---|---|---|
| 2 1 | XXXXX-XXX | DOOR ASSEMBLY - Baggage compartment | X | XXXXXXX and up |
| 2 | XXXXX-XXX | . TUBE ASSEMBLY - Baggage door latch | X | |
| 3 | XXXXX-XXX | . . CLEVIS - Door latch tube assembly | X | |
| 4 | XXXXX-XXX | . . CLIP - Door latch tube assembly | X | |

In the nomenclature column, the next higher assembly relationship of items covered is shown by the degree of indention of each item and is indicated by an asterisk (*). One asterisk signifies one indention, two signifies two indentions, etc. The example listing above is interpreted as follows:

If the DOOR ASSEMBLY (not indented) is ordered, it will include the three items indented under the DOOR ASSEMBLY.

If the TUBE ASSEMBLY (indented one space) is ordered, it will include the two items indented under the TUBE ASSEMBLY.

If you want only a CLEVIS or CLIP, you order only that item.

3. Piper will supply all attaching parts to its customers in any quantity. When purchasing the attaching parts such as nuts, bolts, washers, cotter pins, etc. from Piper, the customer or service center need only order the part(s) needed.
4. All items of Optional Equipment are contained in the parts list in their proper sequence and sections. These items were not marked optional, since they are fully identified by their descriptions.

## HOW TO IDENTIFY A PART IF YOU KNOW WHAT IT LOOKS LIKE AND KNOW WHERE IT IS LOCATED

1. Refer to Figure 1 to determine the section number in which the part is used.
2. Refer to the Table of Contents and locate the section. Note the figure numbers that illustrate the various subgroups of this main section. Select the figure title you think might contain the part you wish to identify and proceed to the grid (page) specified. If you don't find the part on this illustration, try another figure in this group.
3. Refer to Figure and Index Number in the parts listing for description of the part.

## HOW TO ORDER PARTS

When ordering parts for your Piper airplane, please observe the following instructions:

1. Place your order with your local distributor or service center.
2. Specify the model and serial number of your airplane.
3. Specify Part Number, Name, Type and Quantity Required.
4. Specify the method of shipment — freight, express, parcel post, air express, air freight or air parcel post. Where the nature of the shipment requires it or when no instructions are given, we reserve the right to ship the most suitable way.
5. Request price and delivery information prior to order placement.

## GENERAL INFORMATION

1. Shortages
   All orders are checked before leaving our Shipping Department. A packing slip is enclosed with the shipment. Claims for errors or shortages must be made within three days after receipt of orders.

2. Returned Goods
   No material should be returned without first securing written permission. Material sent in without notice will be held at the owner's risk for thirty days and will then be disposed of as we see fit.

   Transportation charges must be prepaid on returned goods or the shipment will be refused.

3. Transportation Liabilities
   Piper Aircraft, Inc. cannot be held liable for damages to parts in transit from the factory. If a shipment is received in a damaged condition, have the delivery man or transportation company make a notation of the damage and file your claim with the carrier. In case of concealed damage, do not attempt to remove the part from the shipping container, or try to repair the damage, call the carrier and have their claim agent inspect the damage before filing your claim with the carrier.



Island Enterprises

MODEL SERIAL NUMBER INFORMATION

The serial numbers of the PA-28-181 Archer III aircraft covered by this Parts Catalog are as follows:

2843001 and up

**SERIAL NUMBER EXPLANATION**

EXAMPLE

28 43 001

TYPE CERTIFICATE DESIGNATION

MODEL SEQUENCE NUMBER

MODEL CODE
43 = PA-28-181 ARCHER III

| | | |
|---|---|---|
| MODEL YEAR | 1995 | 2843001 thru 2843020 |
| MODEL YEAR | 1996 | 2843021 thru 2843066 |
| MODEL YEAR | 1997 | 2843067 thru 2843111 |
| MODEL YEAR | 1998 | 2843112 thru 2843129 |
| | | 2843131 thru 2843202 |
| MODEL YEAR | 1999 | 2843130 |
| | | 2843203 thru 2843308 |
| MODEL YEAR | 2000 | 2843309 thru 2843414 |
| MODEL YEAR | 2001 | 2843415 thru 2843500 |
| MODEL YEAR | 2002 | 2843501 thru 2843541 |
| MODEL YEAR | 2003 | 2843542 thru 2843585 |
| MODEL YEAR | 2004 | 2843586 thru 2843604 |
| MODEL YEAR | 2005 | 2843605 thru 2843619 |
| MODEL YEAR | 2006 | 2843620 thru 2843647 |
| MODEL YEAR | 2007 | 2843648 and Up |

## STANDARD PAINT CHART

| | MFG. NO. | PIPER PART NUMBER QUART | GALLON |
|---|---|---|---|
| **EXTERIOR** | | | |
| POLYURETHANE ENAMEL (Dupont Imron) | | | |
| Baja Yellow | H7850U | 4175 461 | 1175 461 |
| Juneau White | H7848U | 4175 462 | 1175 462 |
| Ocala Orange | H7857UM | 4175 463 | 1175 463 |
| Madrid Red | H7851UM | 4175 464 | 1175 464 |
| Bahama Blue | H7853U | 4175 465 | 1175 465 |
| Avocado | H7852U | 4175 466 | 1175 466 |
| Las Vegas Gold | 5242U | 4176 121 | 1176 121 |
| Dakota Black | 99U | 4175 467 | 1175 467 |
| Denver Brown | H7859U | 4176 122 | 1176 122 |
| Matador Red | H7858U | 4175 468 | 1175 468 |
| Royal Blue | H7856U | 4175 469 | 1175 469 |
| Hickory Brown | H7855U | 4175 470 | 1175 470 |
| Silver | 4531U | 4176 123 | 1176 123 |
| Lime Green | H7854U | 4175 460 | 1175 460 |
| Sage Green | K7887U | 4176 132 | 1175 132 |
| Firethorn | K7888UW | 4176 133 | 1176 133 |
| Buckskin | K7890U | 4176 135 | 1176 135 |
| Dark Blue | K7891U | 4176 136 | 1176 136 |
| Platinum Gray | N7819U | 4176 126 | 1176 126 |
| Sandalwood Tan | N7818U | 4176 127 | 1176 127 |
| Dark Claret | K7886U | 4176 131 | 1176 131 |
| Burnished Gold | N8068U | 4763 528 | 1763 528 |
| Light Blue | K8149U | 4763 529 | 1763 529 |
| Dark Saddle | N8070U | 4763 530 | 1763 530 |
| Dark Green | N8071U | 4763 531 | 1763 531 |
| Saffron | K7889UH | 4763 532 | 1763 532 |
| Light Sandalwood | W8275 | 4763 533 | 1763 533 |
| Light Platinum | W8274 | 4763 534 | 1763 534 |
| Catalyst (Activator) | 912S | 4179 950 | 1179 950 |
| Reducer | Y8485S | 4179 145 | 1179 145 |
| Retarder | 8100S | 4179 599 | 1179 599 |
| Accelerator | 189S | 4179 951 | |
| POLYURETHANE PRIMER (Dupont Imron) | | | |
| Wash Primer | B9287 | 4170 766 | 1179 766 |
| Wash Primer Thinner | K1733 | 4179 452 | 1179 452 |
| Acid Thinner | B9289 | 4179 403 | 1179 403 |
| **INTERIOR** | | | |
| INSTRUMENT PANEL | | | |
| Cadet Dark Grey | | | 170 902 |
| Grey II | | | 170 907 |

NOTE: SEE SERVICE SPARES LETTER 407 FOR AVAILABILITY OF COLOR PAINT FOR THERMOPLASTIC INTERIOR PANELS.

# TABLE OF CONTENTS


| FIGURE NUMBER | FIGURE TITLE | GRID NUMBER |
|---|---|---|
| 1 | Complete Airplane | 1A13 |
| | **SECTION I WING GROUP** | |
| 2 | Wing Installation | 1A16 |
| 3 | Wing Leading Edge Assembly | 1A20 |
| 4 | Wing Trailing Edge Assembly | 1A24 |
| 5 | Aileron Assembly | 1B4 |
| 6 | Flap Assembly | 1B6 |
| | **SECTION II FUSELAGE GROUP** | |
| 7 | Fuselage Assembly - Complete | 1B14 |
| 8 | Fuselage Upper Forward Cockpit Assembly | 1B18 |
| 9 | Fuselage Upper Center Cockpit Assembly | 1B22 |
| 10 | Fuselage Lower Forward Cockpit Assembly | 1C2 |
| 11 | Fuselage Lower Aft Cockpit Assembly | 1C6 |
| 12 | Fuselage Aft Section | 1C8 |
| 13 | Fuselage Cabin and Baggage Door Installation | 1C12 |
| 14 | Fuselage Enclosure Installation | 1C16 |
| | **SECTION III TAIL SURFACES GROUP** | |
| 15 | Tail Surfaces Installation | 1C20 |
| 16 | Stabilator Assembly | 1C24 |
| 17 | Fin Assembly | 1D2 |
| 18 | Rudder Assembly | 1D4 |
| | **SECTION IV LANDING GEAR GROUP** | |
| 19 | Nose Gear Installation | 1D10 |
| 20 | Nose Gear Strut Assembly | 1D14 |
| 21 | Nose Wheel Assembly (Cleveland) | 1D18 |
| 22 | Nose Wheel Assembly (McCauley) | 1D20 |
| 23 | Main Gear Installation | 1D22 |
| 24 | Main Wheel Assembly | 1E2 |
| 25 | Brake Assembly | 1E4 |
| 26 | Main and Nose Wheel Faring Installation | 1E6 |
| 27 | Main Landing Gear Strut Fairing Installation | 1E10 |
| 28 | Hand Brake Installation | 1E12 |
| 29 | Toe Brake Installation | 1E16 |
| 30 | Toe Brake Master Cylinder Assembly | 1E18 |

# TABLE OF CONTENTS


| FIGURE NUMBER | FIGURE TITLE | GRID NUMBER |
|---|---|---|
| | **SECTION V CABIN EQUIPMENT GROUP** | |
| 31 | Interior Installation | 1F2 |
| 32 | Front Seats Installation | 1F8 |
| 33 | Carpet Installation | 1F12 |
| 34 | Vertically Adjustable Front Seat Assembly | 1F14 |
| 35 | Rear Seats Installation | 1F18 |
| | **SECTION VI INSTRUMENTS GROUP** | |
| 36 | Instrument Panel Installation | 1G2 |
| 37 | Vacuum System Installation | 1G6 |
| 38 | Auxiliary Vacuum System Installation | 1G8 |
| 39 | Pitot Static System Installation | 1G10 |
| | **SECTION VII POWER PLANT GROUP** | |
| 40 | Power Plant Installation | 1G16 |
| 41 | Engine Exhaust System Installation | 1G20 |
| 42 | Engine Baffle Installation | 1G22 |
| 43 | Engine Cowl Installation | 1H2 |
| 44 | Engine Controls Installation | 1H6 |
| | **SECTION VIII FUEL SYSTEM GROUP** | |
| 45 | Forward Fuel System Installation | 1H14 |
| 46 | Aft Fuel System Installation | 1H18 |
| 47 | Fuel Tank Assembly | 1H20 |
| | **SECTION IX CONTROL SYSTEM GROUP** | |
| 48 | Control System Installation | 1I2 |
| 49 | Flap Control Installation | 1I6 |
| 50 | Stabillator Trim Installation | 1I10 |
| 51 | Rudder Trim Mechanism Installation | 1I14 |
| 52 | Control Wheel Installation | 1I16 |
| 53 | Rudder Pedal Installation | 1I20 |

# TABLE OF CONTENTS


| FIGURE NUMBER | FIGURE TITLE | GRID NUMBER |
|---|---|---|
| | **SECTION X ENVIRONMENTAL GROUP** | |
| 54 | Cabin Heat and Defroster Installation | 2A16 |
| 55 | Fresh Air Ventilation Installation | 2A20 |
| 56 | Air Conditioning Compressor, Refrigerant Lines, and Alternator Installation | 2A22 |
| 57 | Air Conditioning Duct and Evaporator Installation | 2B2 |
| 58 | Air Conditioning Condenser Installation | 2B4 |
| | **SECTION XI ELECTRICAL SYSTEM GROUP** | |
| 59 | Fwd Electrical System Installation | 2B12 |
| 60 | Instrument Panel Electrical Installation - Non Entegra | 2B18 |
| 60A | Entegra Instrument Panel Electrical Installation | 2B22 |
| 61 | Overhead Switch Panel | 2C2 |
| 62 | Wing & Aft Electrical System Installation and Lighting | 2C4 |
| 63 | Battery Installation | 2C10 |
| 64 | Auxiliary Power Receptacle Installation | 2C12 |
| 65 | Air Conditioning Electrical Installation | 2C14 |
| | **SECTION XII ELECTRONICS GROUP** | |
| 66 | Magnetometer & Misc. Entegra Avionics Equipment | 2D2 |
| 67 | Deleted | |
| 68 | Emergency Locator Transmitter (ELT 110-4) Installation | 2D6 |
| 69 | Encoder Installation | 2D8 |
| 70 | Radio, Antenna System and Static Wicks Installation | 2D10 |
| 71 | Avionics Cooling Installation | 2D14 |
| | Avionics Equipment Lists | 2D17 |
| | **SECTION XIII MISCELLANEOUS GROUP** | |
| 72 | Placards and Exterior Stencils | 2E1 |
| | Piper Service and Optional Kits | 2E9 |
| | Miscellaneous Hardware and Consumables | 2E11 |
| | **NUMERICAL INDEX** | 2F1 |

THIS PAGE INTENTIONALLY LEFT BLANK

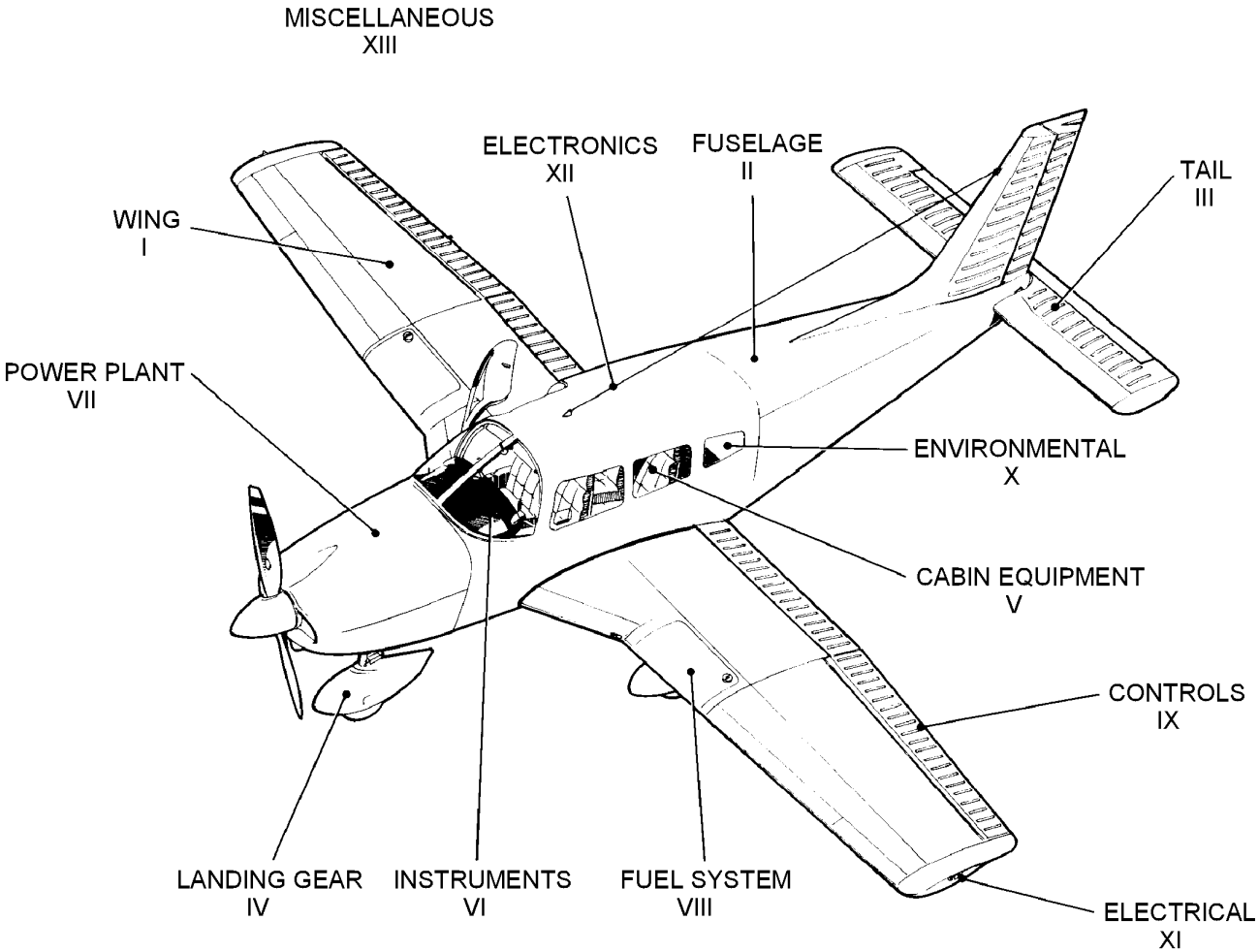


**Complete Airplane Drawings**

| | |
|---|---|
| **85191-002** | **2843001 thru 2843202** |
| **85191-003** | **2843203 thru 2843414** |
| **85191-004** | **2843415 and up** |
| **85191-005** | **2843598 and up (with Entegra)** |

Figure 1. Complete Airplane

## SERVICE BULLETINS INCORPORATED

| | | | |
|---|---|---|---|
| 990 | 1037 | 1083 | 1162 |
| 992 | 1040 | 1104 | 1167 |
| 996 | 1041 | 1122 | |
| 1019 | 1050 | 1137 | |
| 1020 | 1057 | 1139 | |
| 1022 | 1066 | 1141 | |
| 1026 | 1079 | 1153 | |

## SERVICE LETTERS INCORPORATED

| | |
|---|---|
| 1019 | 1093 |
| 1024 | |
| 1028 | |
| 1033 | |
| 1066 | |
| 1081 | |
| 1087 | |

# SECTION I
# WING GROUP

Reissued: December 10, 2006



Island Enterprises

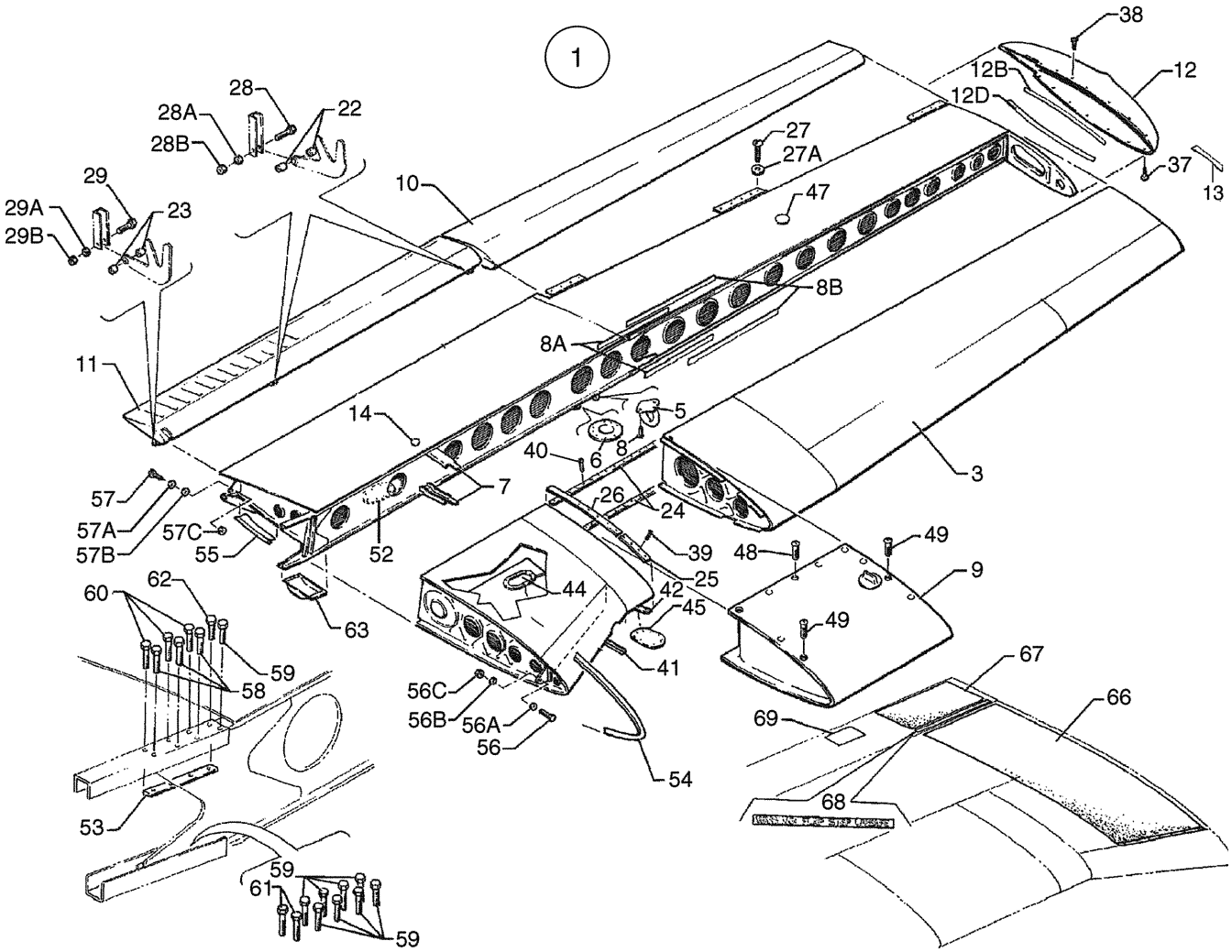


Figure 2. Wing Installation

| Figure and Index Number | Part Number | Nomenclature | No. Req. | Serial Numbers Affected |
|---|---|---|---|---|
| 2- | 38643 (Z) | DRAWING - Wing Installation | | |
| | 83363 (N) | DRAWING - Exterior Finish | | |
| 1 | 38643-008 | WING ASSY - Left (SEE NOTE 1) | 1 | |
| -1A | 38643-009 | WING ASSY - Right (SEE NOTE 1) | 1 | |
| 3 | 35118-020 | . LEADING EDGE ASSY - Wing outboard, left (See Figure 3 for component parts) | 1 | |
| -3A | 35118-021 | . LEADING EDGE ASSY - Wing outboard, right (See Figure 3 for component parts) | 1 | |
| 5 | 18457-000 | . RING - Tie down | 1 | |
| 6 | 35725-002 | . PAD - Jack | 1 | |
| 7 | 62095-000 | . CHANNEL - Wing skin stiffener | 2 | |
| 8 | 410-043 | . SCREW - (MS24694-S56) | 2 | |
| 8A | 35594-002 | . STRAP - Spar splice, top and bottom (11.50” L.) | 2 | |
| 8B | 35594-005 | . STRAP - Spar splice, top and bottom (24.50” L.) | 2 | |
| 9 | 35633-004 | . TANK ASSY - Fuel, left (See Figure 47 for component parts) | 1 | |
| -9A | 35633-005 | . TANK ASSY - Fuel, right (See Figure 47 for component parts) | 1 | |
| 10 | 35640-000 | . AILERON ASSY - Left (See Figure 5 for component parts | 1 | |
| -10A | 35640-001 | . AILERON ASSY - Right (See Figure 5 for component parts | 1 | |
| 11 | 65591-000 | . FLAP ASSY - Left (See Figure 6 for component parts) | 1 | |
| -11A | 65590-001 | . FLAP ASSY - Right (See Figure 6 for component parts) | 1 | |
| 12 | 85402-002 | . TIP ASSY - Wing, left | 1 | |
| -12A | 85402-003 | . TIP ASSY - Wing, right | 1 | |
| 12B | 35641-006 | . . STIFFENER - Wing tip, upper, left | 1 | |
| -12C | 35641-007 | . . STIFFENER - Wing tip, upper, right | 1 | |
| 12D | 35641-008 | . . STIFFENER - Wing tip, lower, left | 1 | |
| -12E | 35641-009 | . . STIFFENER - Wing tip, lower, right | 1 | |
| 13 | 36806-006 | . SHIELD - Recognition light, wing tip, left | 1 | |
| -13A | 36806-007 | . SHIELD - Recognition light, wing tip, right | 1 | |
| 14 | 63595-000 | . BUTTON ASSY - Plug, gear service access (with retaining ring) | 2 | |
| 22 | 63900-019 | . BUSHING - Flap hinge, center and outboard | 8 | |
| 23 | 63900-020 | . BUSHING - Flap hinge, inboard | 4 | |
| 24 | 406-927 | . CHANNEL - Gang | 4 | |
| 25 | 96926-000 | . CHANNEL - Gang | 6 | |
| 26 | 406-942 | . CHANNEL - Gang | 6 | |
| 27 | 415-320 | . SCREW - (MS27039-1-10) | 26 | |
| 27A | 690-612 | . WASHER - (NAS1149FN363P) | 26 | |
| -27B | 404-526 | . NUT - (MS21042-3) | 26 | |
| 28 | 401-270 | . BOLT - (AN3-11A) | 4 | |
| 28A | 690-612 | . WASHER - (NAS1149FN363P) | 4 | |
| 28B | 404-526 | . NUT - (MS21042-3) | 4 | |
| 29 | 400-444 | . BOLT - (AN3-13A) | 2 | |
| 29A | 690-612 | . WASHER - (NAS1149FN363P) | 2 | |
| 29B | 404-526 | . NUT - (MS21042-3) | 2 | |
| 37 | 410-054 | . SCREW - (MS24694-C5) | 16 | |
| -37A | 598-395 | . WASHER | 14 | |
| 38 | 410-054 | . SCREW - (MS24694-C5) | 16 | |

-ITEM NOT ILLUSTRATED

When ordering, always specify Part Number, Description, and Serial Number of Aircraft

| Figure and Index Number | Part Number | Nomenclature | No. Req. | Serial Numbers Affected |
|---|---|---|---|---|
| 2- | | | | |
| -38A | 598-395 | . WASHER | 14 | |
| -38B | 603-349 | . CLIP NUT | 14 | |
| 39 | 415-309 | . SCREW - (MS27039-0809) | 40 | |
| 40 | 415-312 | . SCREW - (MS27039-0812) | 60 | |
| 41 | 96926-000 | . CHANNEL ASSY - Gang, bottom, rear | 2 | |
| 42 | 96927-000 | . CHANNEL ASSY - Gang, bottom, forward | 2 | |
| 44 | 62109-000 | . COVER - Inspection | 12 | |
| -44A | 419-923 | . SCREW - Sheet metal | 48 | |
| -44B | 406-415 | . NUT - (NAS395-16-1) | 48 | |
| 45 | 38118-005 | . COVER - Inspection | 2 | |
| 47 | 453-966 | . BUTTON - Plug | 2 | |
| 48 | 415-312 | . SCREW - (MS27039-0812) | 60 | |
| 49 | 415-309 | . SCREW - (MS27039-0809) | 78 | |
| -51 | 35802-003 | . STALL STRIP | 2 | |
| 52 | 38572-002 | . COVER | 1 | |
| -52A | 414-761 | . SCREW - (MS24693-S48) | 8 | |
| 53 | 62121-000 | SHIM - Wing attachment | 2 | |
| -53A | 63078-008 | RUBBER DISC | 2 | |
| -53B | 63078-012 | RUBBER DISC | 2 | |
| 54 | 65773-000 | MOULDING - Wing root | 2 | |
| 55 | 67723-000 | PLATE ASSY - Aft wing access, left | 1 | |
| -55A | 67723-001 | PLATE ASSY - Aft wing access, right | 1 | |
| -55B | 419-923 | SCREW - Sheet metal | 6 | |
| -55C | 406-412 | NUT - (C-10163-8A-1) | 5 | |
| | | (599-495 Nut (A1789-821) acceptable as a replacement) | | |
| -55D | 406-415 | NUT - (NAS395-16-1) | 1 | |
| 56 | 402-680 | BOLT - (NAS1104-17) | 2 | |
| 56A | 690-611 | WASHER - (NAS1149F0463P) | 2 | |
| 56B | 690-613 | WASHER - (NAS1149F0432P) | 2 | |
| 56C | 404-530 | NUT - (MS21042-4) | 2 | |
| 57 | 402-915 | BOLT - (NAS464P6LA6) | 2 | |
| | | (Reference Piper Service Letter #1087 - latest revision) | | |
| 57A | 690-629 | WASHER - (NAS1149F0663P) | AR | |
| | | (Reference Piper Service Letter #1087 - latest revision) | | |
| 57B | 690-620 | WASHER - (NAS1149F0632P) | AR | |
| | | (Reference Piper Service Letter #1087 - latest revision) | | |
| 57C | 404-532 | NUT - (MS21042-6) | 2 | |
| | | (Reference Piper Service Letter #1087 - latest revision) | | |
| 58 | 402-351 | BOLT - (AN176-12A) | 6 | |
| -58A | 690-629 | WASHER - (NAS1149F0663P) | 12 | |
| -58B | 96352-003 | WASHER | 6 | |
| -58C | 404-532 | NUT - (MS21042-6) | 6 | |
| 59 | 402-352 | BOLT - (AN176-13A) | 18 | |
| -59A | 690-629 | WASHER - (NAS1149F0663P) | 32 | |
| -59B | 96352-003 | WASHER | 18 | |
| -59C | 404-532 | NUT - (MS21042-6) | 18 | |
| 60 | 402-352 | BOLT - (AN176-13A) | 6 | |
| -60A | 690-629 | WASHER - (NAS1149F0663P) | 15 | |
| -60B | 404-532 | NUT - (MS21042-6) | 6 | |
| 61 | 402-352 | BOLT - (AN176-13A) | 4 | |
| -61A | 96352-003 | WASHER | 8 | |
| -61B | 404-532 | NUT - (MS21042-6) | 4 | |
| 62 | 402-349 | BOLT - (AN176-14A) | 2 | |
| -62A | 690-629 | WASHER - (NAS1149F0663P) | 6 | |
| -62B | 404-532 | NUT - (MS21042-6) | 2 | |

-ITEM NOT ILLUSTRATED

When ordering, always specify Part Number, Description, and Serial Number of Aircraft

| Figure and Index Number | Part Number | Nomenclature | No. Req. | Serial Numbers Affected |
|---|---|---|---|---|
| 2- | | | | |
| 63 | 63942-000 | COVER - Wing bolt, left | 1 | |
| -63A | 63942-001 | COVER - Wing bolt, right | 1 | |
| -63B | 419-922 | SCREW - Sheet metal | 6 | |
| -64 | 63078-009 | RUBBER DISC | 2 | |
| -65 | 65721-000 | SEAL ASSY | 4 | |
| -65A | 65722-000 | SEAL ASSY | 2 | |
| 66 | 79174-000 | WING WALK - Safety, wing | 1 | |
| 67 | 79174-004 | WING WALK - Safety, flap | 1 | |
| 68 | 582-789 | PLACARD - Flap warning (35664-002) (See Figure 72) | 1 | |
| 69 | 583-583 | PLACARD - No Step (87341-004) (See Figure 72) | 2 | |

NOTES:

1. SEE FIGURE 3 FOR LEADING EDGE COMPONENT PARTS.
   SEE FIGURE 4 FOR TRAILING EDGE COMPONENT PARTS.

-ITEM NOT ILLUSTRATED

When ordering, always specify Part Number, Description, and Serial Number of Aircraft

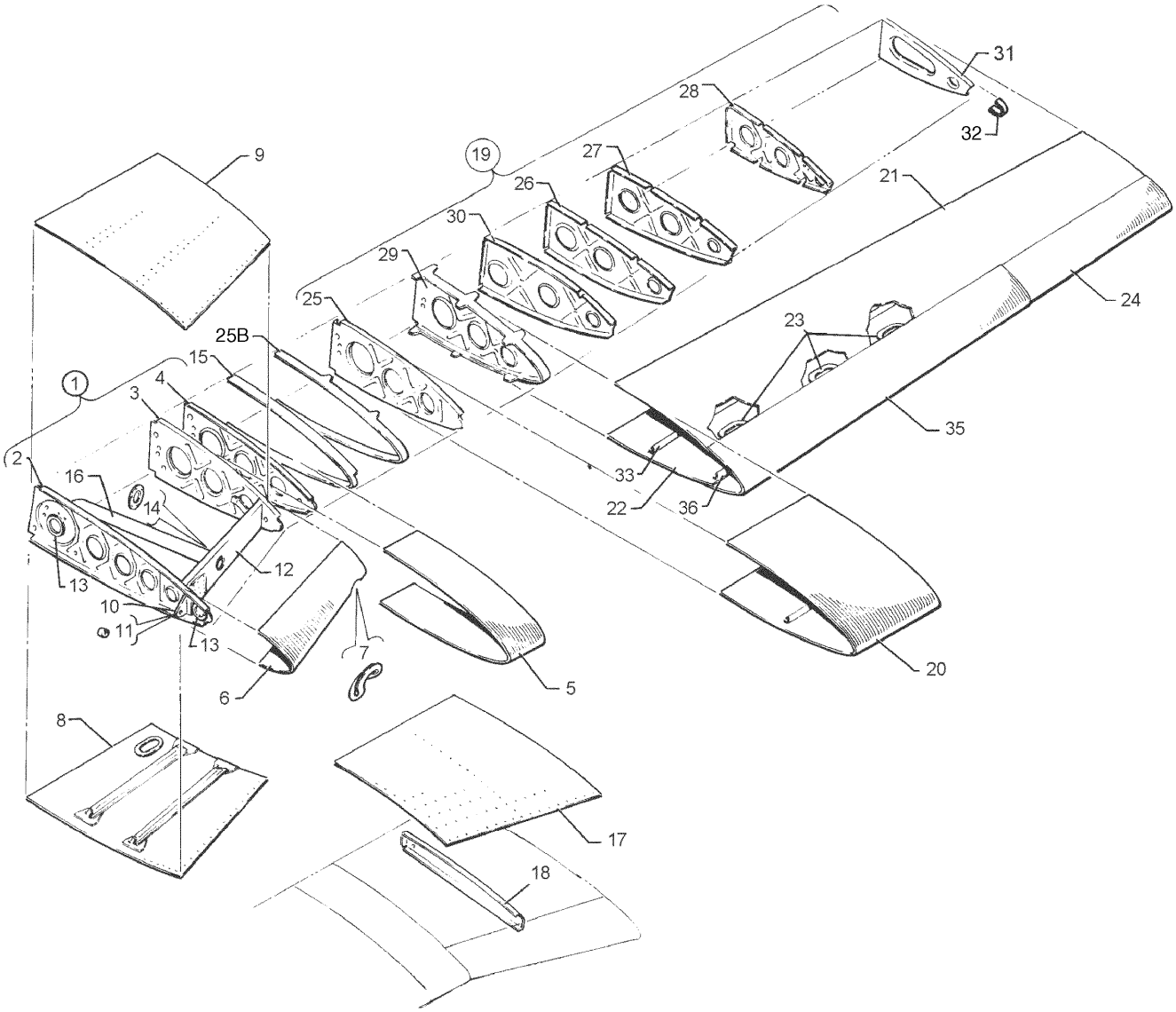


Figure 3. Wing Leading Edge Assembly

| Figure and Index Number | Part Number | Nomenclature | No. Req. | Serial Numbers Affected |
|---|---|---|---|---|
| 3- | 38643 (Z) | DRAWING - Wing Installation | | |
| 1 | 38643-008 | LEADING EDGE ASSY - Wing inboard, left | 1 | |
| -1A | 38643-009 | LEADING EDGE ASSY - Wing inboard, right | 1 | |
| 2 | 95639-002 | . RIB - Wing nose, root, left | 1 | |
| -2A | 95639-003 | . RIB - Wing nose, root, right | 1 | |
| 3 | 62021-000 | . RIB - Wing nose, sta. 49.25, left | 1 | |
| -3A | 62021-001 | . RIB - Wing nose, sta. 49 25. right | 1 | |
| 4 | 35642-000 | . RIB - Wing nose, sta. 57 00, left | 1 | |
| -4A | 35642-001 | . RIB - Wing nose, sta. 57 00, right | 1 | |
| 5 | 38118-000 | . SKIN ASSY - Leading edge, inboard | 1 | |
| -5A | 38118-002 | . . SKIN | 1 | |
| -5B | 415-533 | . SCREW - (MS35206-243) | 8 | |
| 6 | 62085-003 | . SKIN ASSY - Leading edge, left | 1 | |
| -6A | 62085-002 | . SKIN ASSY - Leading edge, right | 1 | |
| 7 | 68111-000 | . DOUBLER - Air inlet | 1 | |
| -7A | 68110-000 | . SCREEN | 1 | |
| 8 | 38217-004 | . SKIN ASSY - Bottom, inboard root, left | 1 | |
| -8A | 38217-005 | . SKIN ASSY - Bottom, inboard root, right | 1 | |
| -8B | 65786-003 | . MAT | 4 | |
| -8C | 65786-005 | . MAT | 2 | |
| 9 | 62087-000 | . SKIN ASSY - Top, inboard root, left | 1 | |
| 10 | 66761-002 | . FITTING - Forward spar, left | 1 | |
| -10A | 66761-003 | . FITTING - Forward spar, right | 1 | |
| 11 | 63900-030 | . . BUSHING - Front spar attachment (SEE NOTE 1) | 1 | |
| 12 | 66623-000 | . SPAR - Leading edge, inboard, left | 1 | |
| -12A | 66623-001 | . SPAR - Leading edge, inboard, right | 1 | |
| 13 | 68119-000 | . GASKET - Air duct | 2 | |
| 14 | 66621-000 | . DOUBLER - Forward spar | 1 | |
| -14A | 63976-060 | . GROMMET | 2 | |
| 15 | 62091-002 | . STRAP - Fuel tank attachment | 1 | |
| 16 | 66620-000 | . TUBE ASSY - Air duct | 1 | |
| 17 | 62061-002 | . WING WALK - Forward, right | 1 | |
| 18 | 62066-000 | . RIB - Wing walk, right (Reference Piper Service Letter #1081 - latest revision) | 1 | |
| 19 | 35118-020 | LEADING EDGE ASSY - Wing outboard, left | 1 | |
| -19A | 35118-021 | LEADING EDGE ASSY - Wing outboard, right | 1 | |
| 20 | 35118-004 | . SKIN - Middle section, left | 1 | |
| -20A | 35118-005 | . SKIN - Middle section, right | 1 | |
| 21 | 35118-024 | . SKIN - Aft, top, left | 1 | |
| -21A | 35118-025 | . SKIN - Aft, top, right | 1 | |
| 22 | 35118-026 | . SKIN ASSY - Aft, bottom, left | 1 | |
| -22A | 35118-027 | . SKIN ASSY - Aft, bottom, right | 1 | |
| 23 | 95094-000 | . DOUBLER - Cover plate attachment | 3 | |
| 24 | 35118-049 | . SKIN - Forward, left | 1 | |
| -24A | 35118-047 | . SKIN - Forward, right | 1 | |
| 25 | 35140-000 | . RIB - Wing nose, sta. 88.75, left | 1 | |
| -25A | 35140-001 | . RIB - Wing nose, sta. 88.75, right | 1 | |
| 25B | 35140-002 | . . STRAP - Fuel tank attachment, sta. 88.75 | 1 | |
| 26 | 35118-030 | . RIB - Wing nose, sta. 131 60, left | 1 | |
| -26A | 35118-031 | . RIB - Wing nose, sta. 131.60, right | 1 | |
| 27 | 35118-022 | . RIB - Wing nose, sta. 148 60. left | 1 | |
| -27A | 35118-023 | . RIB - Wing nose, sta. 148.60, right | 1 | |
| 28 | 35166-000 | . RIB - Wing nose, sta. 174, left | 1 | |

-ITEM NOT ILLUSTRATED

When ordering, always specify Part Number, Description, and Serial Number of Aircraft

| Figure and Index Number | Part Number | Nomenclature | No. Req. | Serial Numbers Affected |
|---|---|---|---|---|
| 3- | | | | |
| -28A | 35166-001 | . RIB - Wing nose, sta. 174, right | 1 | |
| 29 | 35182-000 | . RIB ASSY - Wing nose, sta. 106.19, left | 1 | |
| -29A | 35182-001 | . RIB ASSY - Wing nose, sta. 106.19, right | 1 | |
| 30 | 35592-000 | . RIB - Wing nose, sta. 117.50, left | 1 | |
| -30A | 35592-001 | . RIB - Wing nose, sta. 117.50, right | 1 | |
| 31 | 35615-000 | . RIB - Wing nose, sta. 206.70, left | 1 | |
| -31A | 35615-001 | . RIB - Wing nose, sta. 206 70, right | 1 | |
| 32 | 35615-004 | . . STRAP - Skin attachment, sta. 206 70, left | 1 | |
| -32A | 35615-005 | . . STRAP - Skin attachment, sta. 206 70, right | 1 | |
| 33 | 35118-013 | . STRINGER - Skin, leading edge | 1 | |
| 35 | 35118-028 | . SKIN - Forward, left | 1 | |
| -35A | 35118-029 | . SKIN - Forward, right | 1 | |
| 36 | 35118-012 | . STRINGER - Skin, leading edge | 1 | |
| -37 | 35118-019 | . DOUBLER | 1 | |

NOTES:

1. USED IF THE FORWARD SPAR FITTING ASSY INCORPORATES AN ALUMINUM ATTACHING PLATE.

-ITEM NOT ILLUSTRATED

THIS PAGE INTENTIONALLY LEFT BLANK

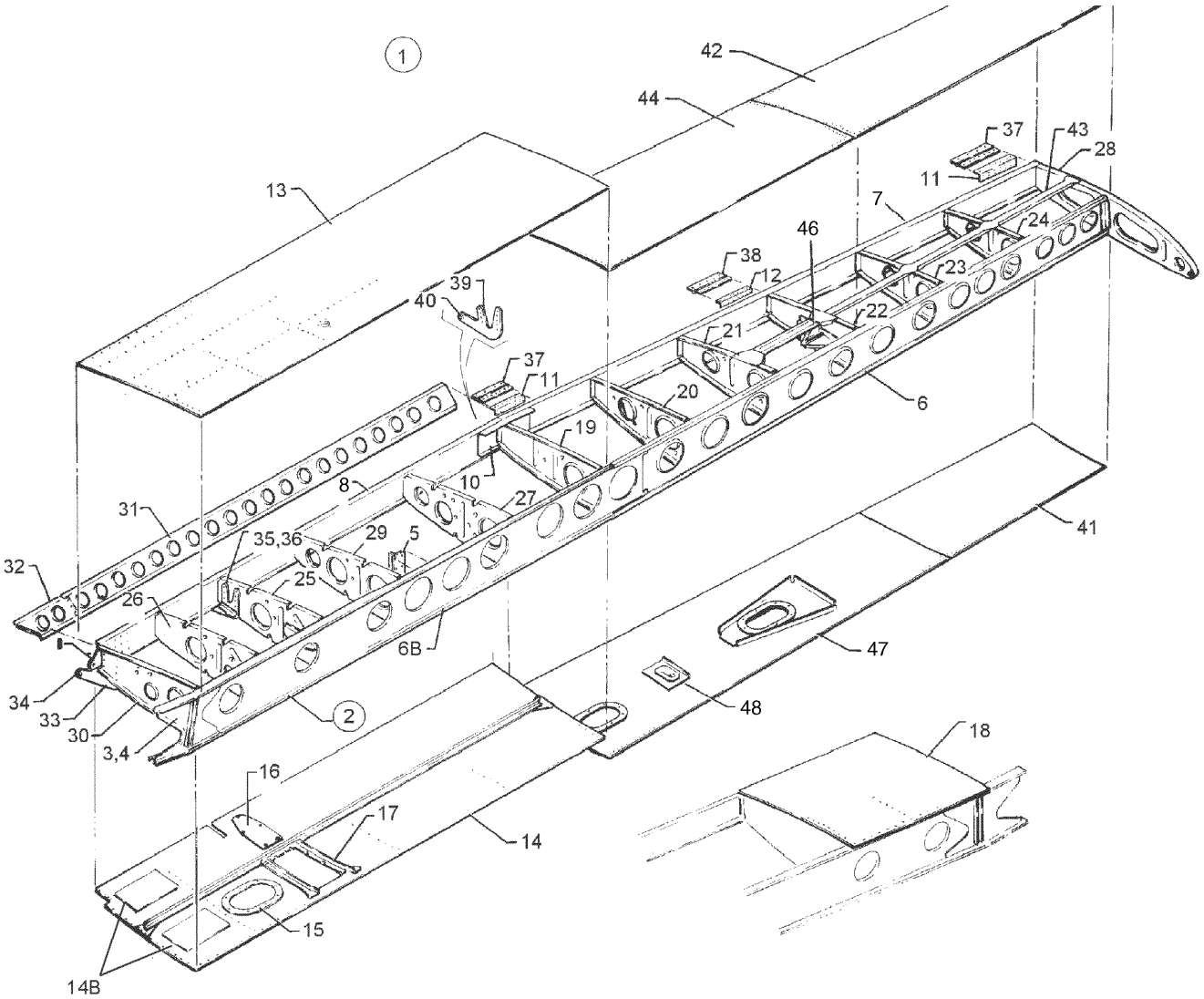


Figure 4. Wing Trailing Edge Assembly

| Figure and Index Number | Part Number | Nomenclature | No. Req. | Serial Numbers Affected |
|---|---|---|---|---|
| 4- | 38643 (Z) | DRAWING - Wing Installation | | |
| 1 | 38643-008 | TRAILING EDGE ASSY - Wing aft section, left (SEE NOTE 1) | 1 | |
| -1A | 38643-009 | TRAILING EDGE ASSY - Wing aft section, right (SEE NOTE 1) | 1 | |
| 2 | 35168-008 | . SPAR ASSY - Wing main, left | 1 | |
| -2A | 35168-009 | . SPAR ASSY - Wing main, right | 1 | |
| 3 | 62071-000 | . . DOUBLER ASSY - Forward, left | 1 | |
| -3A | 62071-001 | . . DOUBLER ASSY - Forward, right | 1 | |
| 4 | 62072-000 | . . DOUBLER ASSY - Aft, left | 1 | |
| -4A | 62072-001 | . . DOUBLER ASSY - Aft, right | 1 | |
| 5 | 62079-000 | . . TEE - Landing gear attachment | 1 | |
| 6 | 35168-012 | . . SPAR ASSY - Main, outboard, left | 1 | |
| -6A | 35168-013 | . . SPAR ASSY - Main, outboard, right | 1 | |
| 6B | 62073-002 | . . SPAR ASSY - Main, inboard, left | 1 | |
| -6C | 62073-003 | . . SPAR ASSY - Main, inboard, right | 1 | |
| -6D | 63976-042 | . . GROMMET | 1 | |
| -6E | 63976-062 | . . GROMMET | 4 | |
| 7 | 35632-000 | . SPAR ASSY - Wing, aft, outboard, left | 1 | |
| -7A | 35632-001 | . SPAR ASSY - Wing, aft, outboard, right | 1 | |
| 8 | 35174-004 | . . SPAR ASSY - Wing, aft, inboard, left | 1 | |
| -8A | 35174-005 | . . SPAR ASSY - Wing, aft, inboard, right | 1 | |
| -9 | 66762-000 | . . . PLATE - Aft spar | 1 | |
| 10 | 35632-004 | . . DOUBLER - Aft spar, left | 1 | |
| -10A | 35632-005 | . . DOUBLER - Aft spar, right | 1 | |
| 11 | 62105-000 | . . DOUBLER - Rear spar, outboard | 4 | |
| 12 | 62105-002 | . . DOUBLER - Rear spar, inboard | 2 | |
| 13 | 35420-004 | . SKIN ASSY - Top, inboard, left | 1 | |
| -13A | 35422-004 | . SKIN ASSY - Top, inboard, right | 1 | |
| 14 | 35421-010 | . SKIN ASSY - Bottom, inboard, left | 1 | |
| -14A | 35421-011 | . SKIN ASSY - Bottom, inboard, right | 1 | |
| 14B | 65786-002 | . . MAT | 2 | |
| 15 | 38571-002 | . . DOUBLER - Wing skin, sta. 42.72 | 1 | |
| 16 | 37897-002 | . . DOUBLER ASSY - Main gear strut fairing attachment | 1 | |
| -16A | 415-533 | . . SCREW - (MS35206-243) | 7 | |
| -16B | 690-618 | . . WASHER - (NAS1149FN816P) | 7 | |
| 17 | 65690-000 | . . DOUBLER - Fairing plate, left | 1 | |
| -17A | 65690-001 | . . DOUBLER - Fairing plate, right | 1 | |
| 18 | 62061-004 | . SKIN ASSY - Wing walk, right | 1 | |
| 19 | 35616-000 | . RIB - Sta. 106.19, left | 1 | |
| -19A | 35616-001 | . RIB - Sta. 106.19, right | 1 | |
| -19B | 463-422 | . BUSHING | 8 | |
| 20 | 35617-000 | . RIB - Sta. 123.15, left (Refer to Piper Service Bulletin #1122 - latest revision) | 1 | |
| -20A | 35617-001 | . RIB - Sta. 123.15, right (Refer to Piper Service (Refer to Piper Service Bulletin #1122 - latest revision) | 1 | |
| -20B | 104721-002 | . DOUBLER - Reinforcement (Refer to Piper Service (Refer to Piper Service Bulletin #1122 - latest revision) | 1 | |
| 21 | 35618-000 | . RIB - Sta. 140.09, left | 1 | |
| -21A | 35618-001 | . RIB - Sta. 140.09, right | 1 | |
| 22 | 35619-004 | . RIB ASSY - Sta. 157, left | 1 | |
| -22A | 35619-005 | . RIB ASSY - Sta. 157, right | 1 | |
| 23 | 35620-000 | . RIB - Sta. 174, left | 1 | |
| -23A | 35620-001 | . RIB - Sta. 174, right | 1 | |

-ITEM NOT ILLUSTRATED

When ordering, always specify Part Number, Description, and Serial Number of Aircraft

| Figure and Index Number | Part Number | Nomenclature | No. Req. | Serial Numbers Affected |
|---|---|---|---|---|
| 4- | | | | |
| 24 | 35621-000 | . RIB - Sta. 190, left | 1 | |
| -24A | 35621-001 | . RIB - Sta. 190, right | 1 | |
| 25 | 35378-000 | . RIB ASSY - Sta. 49.25, left | 1 | |
| -25A | 35378-001 | . RIB ASSY - Sta. 49.25, right | 1 | |
| -25B | 406-709 | . CLIP NUT | 4 | |
| 26 | 66597-000 | . RIB - Sta. 36.22, left | 1 | |
| -26A | 66597-001 | . RIB - Sta. 36.22, right | 1 | |
| 27 | 66598-000 | . RIB - Sta. 86.03, left | 1 | |
| -27A | 66598-001 | . RIB - Sta. 86.03, right | 1 | |
| -27B | 63976-040 | . GROMMET | 2 | |
| -27C | 63976-051 | . GROMMET | 2 | |
| 28 | 35637-000 | . RIB - Sta. 207.65, left | 1 | |
| -28A | 35637-001 | . RIB - Sta. 207.65, right | 1 | |
| 29 | 66599-000 | . RIB - Sta. 64.59, left | 1 | |
| -29A | 66599-001 | . RIB - Sta. 64.59, right | 1 | |
| 30 | 95636-000 | . RIB - Sta. 24.24, left | 1 | |
| -30A | 95636-001 | . RIB - Sta. 24.24, right | 1 | |
| -30B | 63976-070 | . GROMMET | 2 | |
| -30C | 453-831 | . BUSHING | 22 | |
| 31 | 62129-004 | . STIFFENER - Outboard, left | 1 | |
| -31A | 62129-003 | . STIFFENER - Outboard, right | 1 | |
| -31B | 581-760 | . PLATE | 2 | |
| 32 | 62129-008 | . STIFFENER - Inboard, left | 1 | |
| -32A | 62129-007 | . STIFFENER - Inboard, right | 1 | |
| 33 | 65898-016 | . SUPPORT ASSY - Flap, inboard, left | 1 | |
| -33A | 65898-017 | . SUPPORT ASSY - Flap, inboard, right | 1 | |
| 34 | 452-387 | . . BEARING | 1 | |
| 35 | 65898-001 | . SUPPORT ASSY - Flap, outboard | 1 | |
| 36 | 452-387 | . . BEARING | 1 | |
| 37 | 62371-008 | . HINGE ASSY - Aileron | 2 | |
| 38 | 35636-000 | . HINGE ASSY - Aileron | 1 | |
| 39 | 65898-007 | . SUPPORT ASSY - Flap, center | 1 | |
| 40 | 452-387 | . . BEARING | 1 | |
| 41 | 35634-014 | . SKIN - Bottom, outboard, left | 1 | |
| -41A | 35634-015 | . SKIN - Bottom, outboard, right | 1 | |
| 42 | 35603-020 | . SKIN - Top outboard, left | 1 | |
| -42A | 35603-021 | . SKIN - Top outboard, right | 1 | |
| 43 | 86517-002 | . . STRINGER - Support | 1 | |
| 44 | 35603-026 | . SKIN - Top center, left | 1 | |
| -44A | 35603-027 | . SKIN - Top center, right | 1 | |
| -45 | 86517-003 | . . MAT | 2 | |
| -46 | 35731-000 | . . CHANNEL ASSY - Bellcrank support, left | 1 | |
| -46A | 35731-001 | . . CHANNEL ASSY - Bellcrank support, right | 1 | |
| -47 | 35634-010 | . SKIN ASSY - Bottom, center, left | 1 | |
| -47A | 35634-011 | . SKIN ASSY - Bottom, center, right | 1 | |
| -48 | 35573-000 | . . DOUBLER ASSY - Pitot head, left | 1 | |

NOTES:

1. SERIAL NUMBER OF AIRCRAFT MUST BE SUPPLIED WHEN ORDERING THIS PART.

-ITEM NOT ILLUSTRATED

When ordering, always specify Part Number, Description, and Serial Number of Aircraft



Island Enterprises

THIS PAGE INTENTIONALLY LEFT BLANK

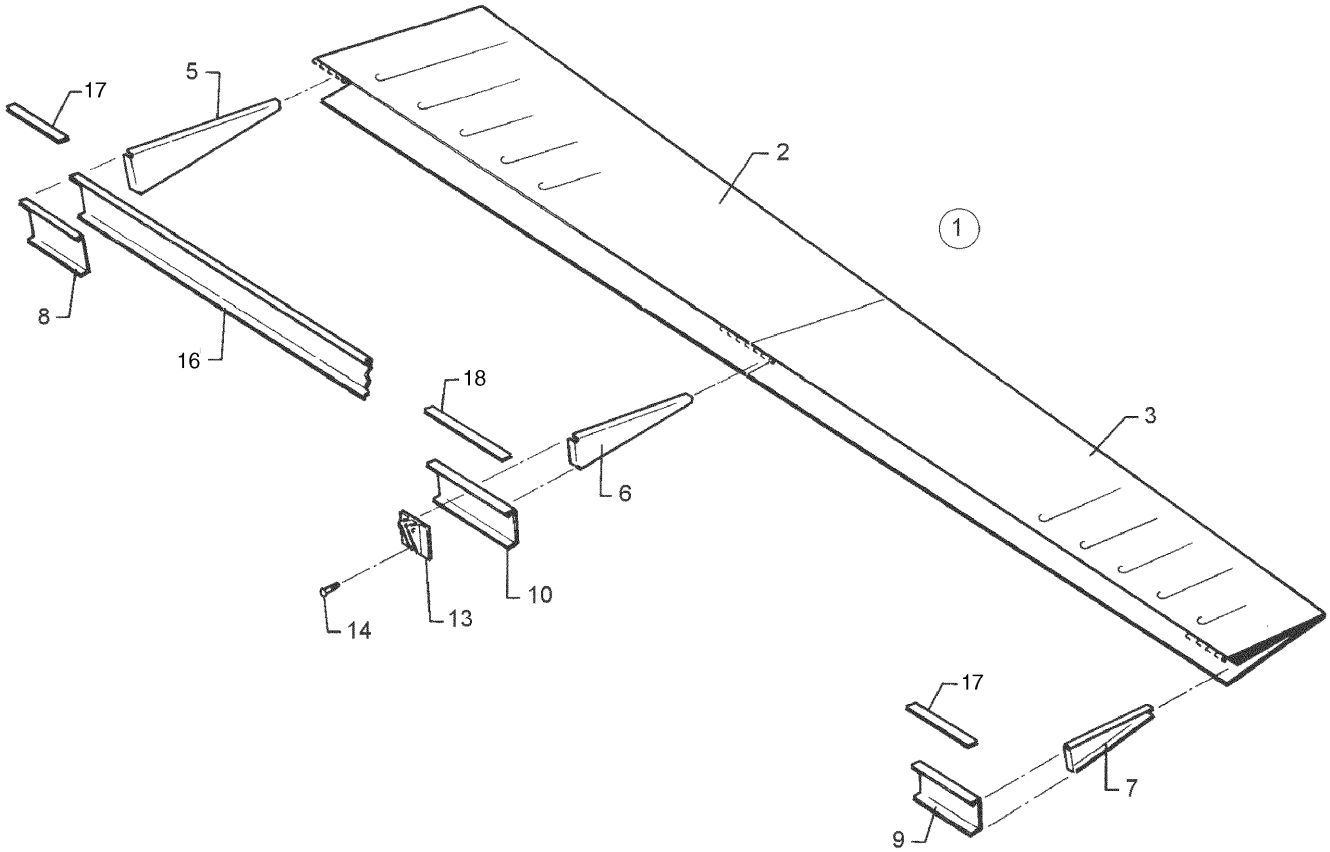


Figure 5. Aileron Assembly

| Figure and Index Number | Part Number | Nomenclature | No. Req. | Serial Numbers Affected |
|---|---|---|---|---|
| 5- | 38643 (Z) | DRAWING - Wing Installation | | |
| 1 | 35640-000 | AILERON ASSY - Left | 1 | |
| -1A | 35640-001 | AILERON ASSY - Right | 1 | |
| 2 | 35640-002 | . SKIN - Aileron, left inboard | 1 | |
| -2A | 35640-003 | . SKIN - Aileron, right inboard | 1 | |
| 3 | 35640-004 | . SKIN - Aileron, left outboard | 1 | |
| -3A | 35640-005 | . SKIN - Aileron, right outboard | 1 | |
| 5 | 35640-008 | . RIB - Aileron, left inboard | 1 | |
| -5A | 35640-009 | . RIB - Aileron, right inboard | 1 | |
| 6 | 35640-010 | . RIB - Aileron, left center | 1 | |
| -6A | 35640-011 | . RIB - Aileron, right center | 1 | |
| 7 | 35640-012 | . RIB - Aileron, left outboard | 1 | |
| -7A | 35640-013 | . RIB - Aileron, right outboard | 1 | |
| 8 | 35640-014 | . DOUBLER - Aileron, left inboard | 1 | |
| -8A | 35640-015 | . DOUBLER - Aileron, right inboard | 1 | |
| 9 | 35640-016 | . DOUBLER - Aileron, left outboard | 1 | |
| -9A | 35640-017 | . DOUBLER - Aileron, right outboard | 1 | |
| 10 | 35640-018 | . DOUBLER - Aileron, left center | 1 | |
| -10A | 35640-019 | . DOUBLER - Aileron, right center | 1 | |
| 13 | 35640-022 | . FITTING - Aileron | 1 | |
| 14 | 410-035 | . SCREW - (MS24694-S53) | 2 | |
| -14A | 690-612 | . WASHER - (NAS1149FN363P) | 2 | |
| -14B | 404-526 | . NUT - (MS21042-3) | 2 | |
| -15 | 35640-028 | . SPAR ASSY | 1 | |
| -15A | 35640-029 | . SPAR ASSY | 1 | |
| 16 | 35640-006 | . . SPAR - Aileron, left | 1 | |
| -16A | 35640-007 | . . SPAR - Aileron, right | 1 | |
| 17 | 35640-020 | . . FILLER - Aileron | 2 | |
| 18 | 35640-021 | . . FILLER - Aileron | 1 | |

-ITEM NOT ILLUSTRATED

When ordering, always specify Part Number, Description, and Serial Number of Aircraft

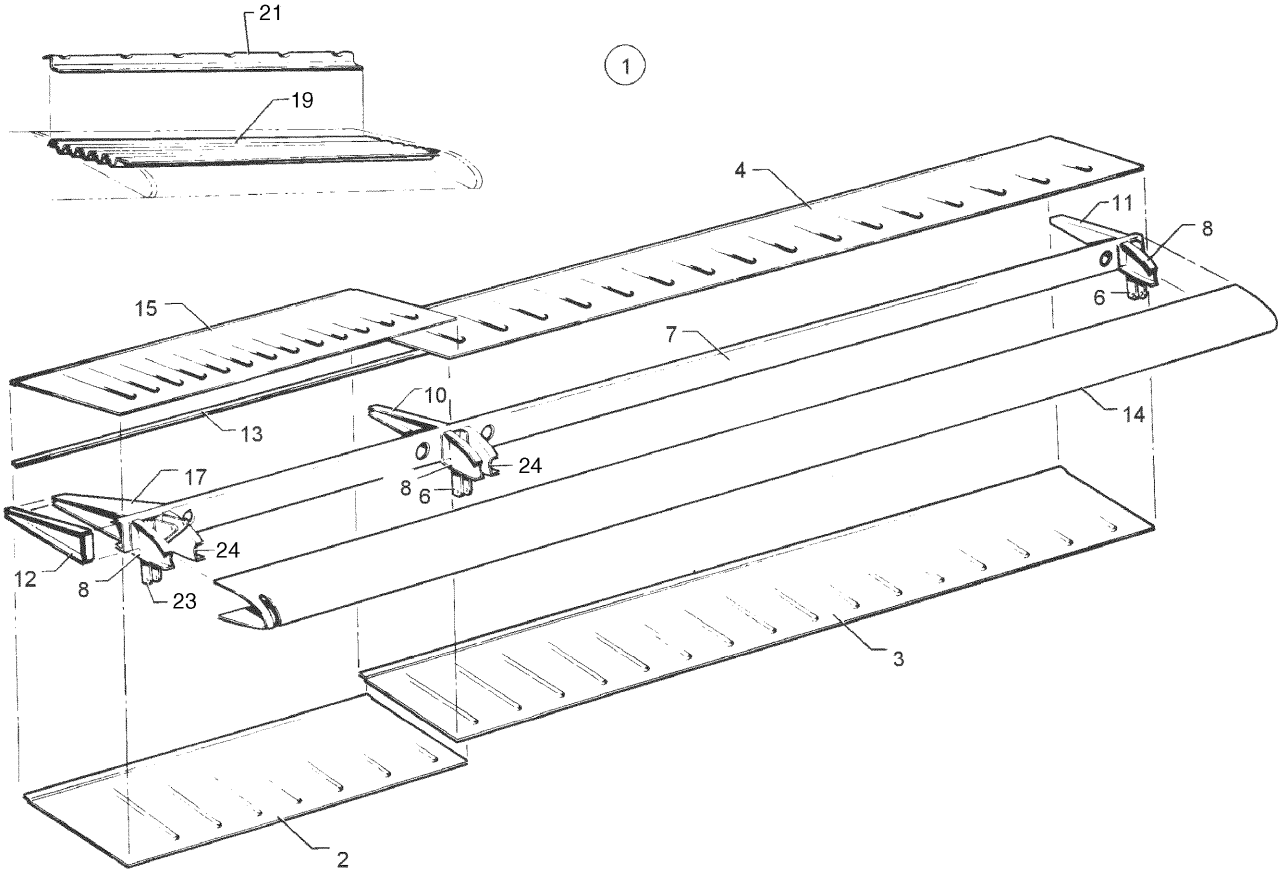


Figure 6. Flap Assembly

| Figure and Index Number | Part Number | Nomenclature | No. Req. | Serial Numbers Affected |
|---|---|---|---|---|
| 6- | 38643 (Z) | DRAWING - Wing Installation | | |
| 1 | 65591-000 | FLAP ASSY - Left | 1 | |
| -1A | 65590-001 | FLAP ASSY - Right | 1 | |
| 2 | 65592-000 | . SKIN - Flap, bottom, left, inboard | 1 | |
| -2A | 65592-001 | . SKIN - Flap, bottom, right, inboard | 1 | |
| 3 | 65588-000 | . SKIN - Flap, bottom, left and right, outboard | 1 | |
| 4 | 65589-000 | . SKIN - Flap, top, left and right, outboard | 1 | |
| 6 | 65899-000 | . BRACKET - Flap hinge, center and outboard | 2 | |
| 7 | 62327-000 | . SPAR - Flap | 1 | |
| 8 | 62328-000 | . RIB - Left flap | 3 | |
| -8A | 62328-001 | . RIB - Right flap | 3 | |
| 10 | 62332-002 | . RIB - Flap, left, wing, sta. 49 | 1 | |
| -10A | 62332-000 | . RIB - Flap, right, wing, sta. 49 | 1 | |
| 11 | 62330-000 | . RIB - Flap, left | 1 | |
| -11A | 62330-001 | . RIB - Flap, right | 1 | |
| 12 | 62331-000 | . RIB - Flap, left, inboard | 1 | |
| -12A | 62331-001 | . RIB - Flap, right, inboard | 1 | |
| 13 | 62320-003 | . STRIP - Flap rear edge | 1 | |
| 14 | 65586-004 | . SKIN - Flap, left, nose | 1 | |
| -14A | 65586-005 | . SKIN - Flap, right, nose | 1 | |
| 15 | 65587-000 | . SKIN - Flap, top, left, inboard | 1 | |
| 17 | 62336-000 | . DOUBLER ASSY - Left | 1 | |
| -17A | 62336-008 | . DOUBLER ASSY - Right | 1 | |
| -18 | 65590-003 | . SKIN | 1 | |
| 19 | 65593-001 | . . CORRUGATION - Flap, top, right, inboard | 1 | |
| -20 | 65594-001 | . . SKIN - Flap, top, right, inboard | 1 | |
| 21 | 65595-001 | . . ZEE - Flap, inboard, right | 1 | |
| -22 | 62320-006 | . RIB ASSY | 1 | |
| -22A | 62320-007 | . RIB ASSY | 1 | |
| 23 | 62324-000 | . . HINGE - Flap, inboard, left | 1 | |
| -23A | 62324-001 | . . HINGE - Flap, inboard, right | 1 | |
| 24 | 62328-001 | . . RIB - Left flap | 2 | |
| -24A | 62328-000 | . . RIB - Right flap | 2 | |
| -25 | 581-760 | . PLATE | 2 | |

-ITEM NOT ILLUSTRATED

**GRIDS 1B8 THRU 1B12**
**INTENTIONALLY BLANK**

# SECTION II
# FUSELAGE GROUP

Reissued: December 10, 2006



Island Enterprises

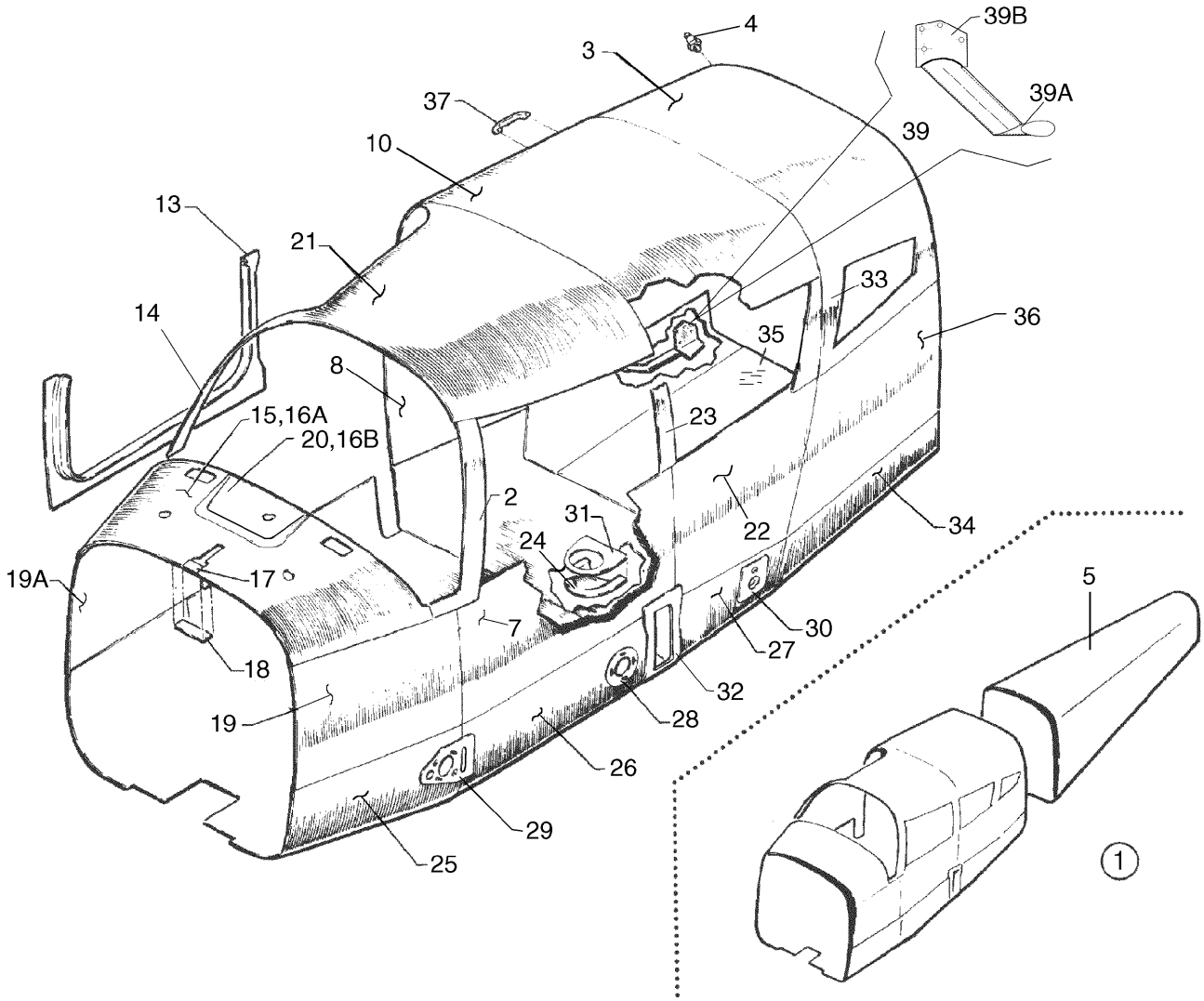


Figure 7. Fuselage Assembly - Complete

| Figure and Index Number | Part Number | Nomenclature | No. Req. | Serial Numbers Affected |
|---|---|---|---|---|
| 7- | 76470 (ED) | DRAWING - Fuselage Assy (Complete) | | |
| | 65384 (M) | DRAWING - Step Assy | | |
| 1 | 76470-005 | FUSELAGE ASSY - Entegra | 1 | 2843598 and up |
| 1 | 76470-004 | FUSELAGE ASSY - Non Entegra | 1 | |
| 2 | 76255-004 | . SKIN - Windshield trim, left side only | 1 | |
| 3 | 79577-004 | . SKIN - Cockpit, top rear | 1 | |
| 4 | 690-727 | . STUD - Fastener (AN227-22) | 1 | |
| -4A | 404-529 | . NUT - (MS20365-832C) | 1 | |
| -4B | 690-616 | . WASHER - (AN960-8) | 1 | |
| 5 | 99466-024 | . AFT FUSELAGE ASSY | RF | |
| | | (See figure 12 for component parts) | | |
| 7 | 84276-002 | . SKIN - Cockpit, left side | 1 | |
| 8 | 84276-003 | . SKIN - Cockpit, right side | 1 | |
| 10 | 79573-003 | . SKIN - Upper cockpit, top center | 1 | |
| 13 | 76467-000 | . LOWER PAN ASSY - Door trim, right side | RF | |
| | | (See figure 9 for component parts) | | |
| -13A | 79561-027 | . UPPER PAN ASSY - Door trim, right side | RF | |
| | | (See figure 9 for component parts) | | |
| 14 | 79561-033 | . . SKIN | 1 | |
| 15 | 79569-000 | . SKIN - Forward upper cockpit, top | 1 | |
| | | (Non Entegra, see item 7-16A for aircraft with Entegra) | | |
| -16 | 101965-002 | . COWL DECK ASSY - Entegra | 1 | 2843598 and up |
| 16A | 101965-003 | . . SKIN - Entegra | 1 | 2843598 and up |
| 16B | 101787-004 | . . DOUBLER - Entegra | 1 | 2843598 and up |
| 17 | 62507-000 | . FILLER - Forward upper cockpit, top | 1 | |
| 18 | 68817-050 | . DOUBLER - Forward upper cockpit, top | 1 | |
| 19 | 79563-003 | . SKIN - Cockpit, left front | 1 | |
| 19A | 79563-000 | . SKIN - Cockpit, right front | 1 | |
| 20 | 78112-005 | . COVER - Cowl deck | 1 | |
| | | (Non Entegra, see item 7-16 for aircraft with Entegra) | | |
| 21 | 79576-003 | . SKIN - Upper cockpit, top front | 1 | |
| 22 | 76476-000 | . SKIN - Cockpit, left side | 1 | |
| 23 | 76256-000 | . SKIN - (Sta. 108.168) | 1 | |
| 24 | 66965-000 | . SCOOP - Cabin air exhaust | 1 | |
| | | (SEE NOTE 1) | | |
| 25 | 79582-002 | . SKIN - Lower cockpit, front | 1 | |
| 26 | 79585-002 | . SKIN - Lower cockpit, center front (Non Entegra) | 1 | |
| 26 | 79585-003 | . SKIN - Lower cockpit, center front (Entegra) | 1 | 2843598 and up |
| 27 | 79578-000 | . SKIN - Lower cockpit, center rear | 1 | |
| 28 | 68539-000 | . DOUBLER ASSY - Lower cockpit, left & right side | 2 | |
| 29 | 68540-000 | . DOUBLER ASSY - Lower cockpit, left | 1 | |
| -29A | 68540-001 | . DOUBLER ASSY - Lower cockpit, right | 1 | |
| 30 | 62549-000 | . DOUBLER - Lower cockpit, left & right side | 2 | |
| 31 | 65556-000 | . DOUBLER - Lower cockpit air scoop (with 4'' hole) | 1 | |
| | | (Used if air conditioning is installed) | | |
| 32 | 62541-000 | . DOUBLER - Lower cockpit, left | 1 | |
| -32A | 62541-001 | . DOUBLER - Lower cockpit, right | 1 | |
| 33 | 76297-000 | . SKIN, left side | 1 | |
| -33A | 76297-001 | . SKIN, right side | 1 | |
| 34 | 79580-000 | . SKIN - Lower cockpit, left rear | 1 | |
| -34A | 79580-001 | . SKIN - Lower cockpit, right rear | 1 | |
| 35 | 79581-000 | . SKIN - Lower cockpit, center | 1 | |
| 36 | 76475-000 | . SKIN - Cockpit, left rear | 1 | |
| 37 | 481-772 | . HANDLE - Upper cockpit, right side only (N12865) | 1 | |

-ITEM NOT ILLUSTRATED

When ordering, always specify Part Number, Description, and Serial Number of Aircraft

| Figure and Index Number | Part Number | Nomenclature | No. Req. | Serial Numbers Affected |
|---|---|---|---|---|
| 7- | | | | |
| -37A | 486-282 | . SCREW - (5323) | 2 | |
| -37B | 408-105 | . WASHER - (MS35335-31) | 2 | |
| 39 | 65384-000 | STEP ASSY - Fuselage | 1 | |
| 39A | 65431-000 | . STEP - Safety | 1 | |
| 39B | 65381-000 | . ANGLE | 1 | |
| -39C | 401-266 | BOLT - (AN3-5A) | 6 | |

NOTES:

1. USED IF CABIN OVERHEAD FRESH AIR VENTILATION IS INSTALLED.

-ITEM NOT ILLUSTRATED

THIS PAGE INTENTIONALLY LEFT BLANK

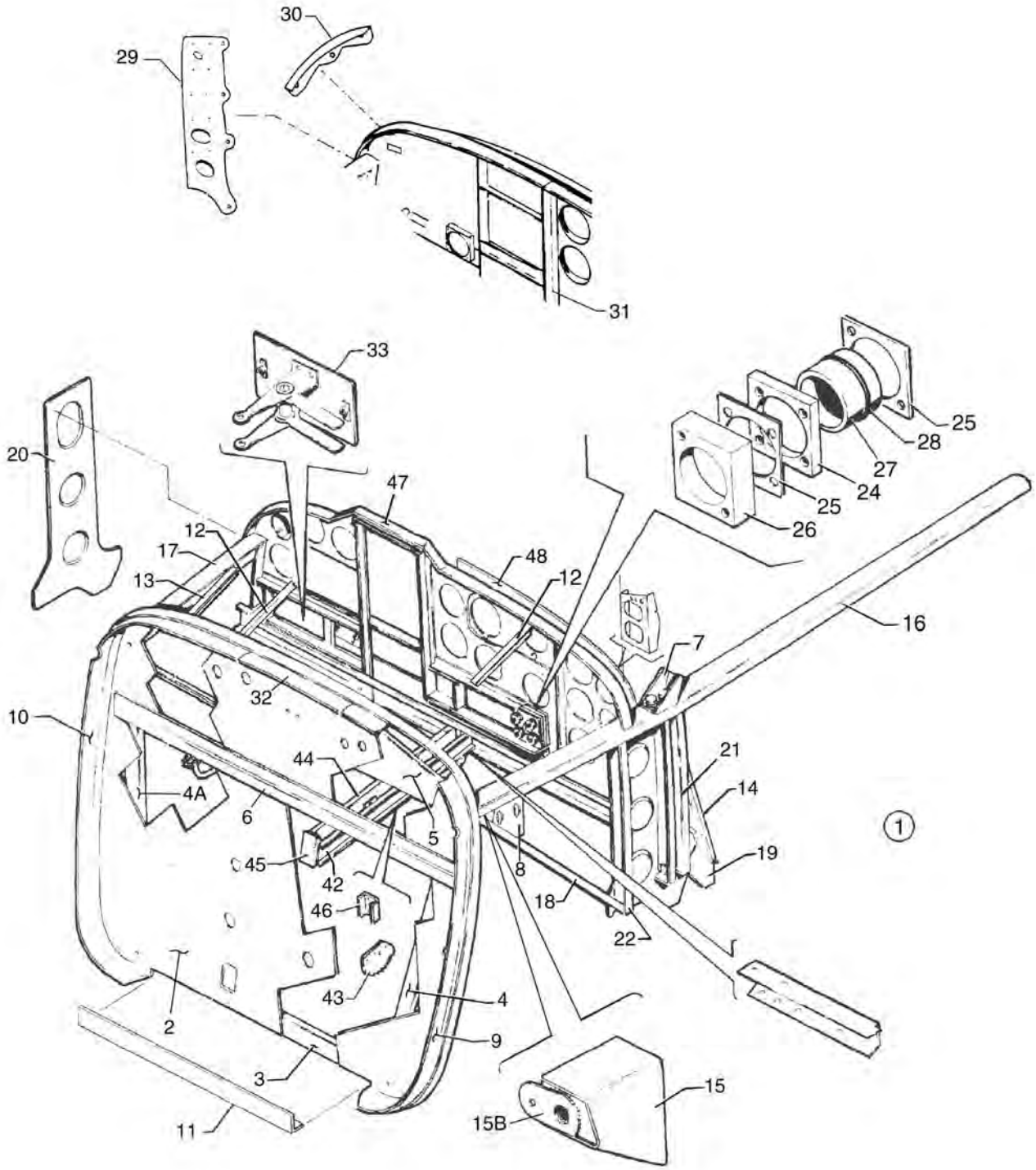


Figure 8. Fuselage Upper Forward Cockpit Assembly

| Figure and Index Number | Part Number | Nomenclature | No. Req. | Serial Numbers Affected |
|---|---|---|---|---|
| 8- | 76470 (ED) | DRAWING - Fuselage Assy (Complete) | | |
| | 65842 (S) | DRAWING - Hand Brake Installation | | |
| 1 | 76470-005 | UPPER COCKPIT ASSY, Forward - Entegra (SEE NOTE 1) | RF | 2843598 and up |
| 1 | 76470-004 | UPPER COCKPIT ASSY, Forward - Non Entegra (SEE NOTE 1) | RF | |
| 2 | 65845-005 | . FIREWALL ASSY (Non Entegra) | 1 | |
| 2 | 65845-006 | . FIREWALL ASSY (Entegra) | 1 | 2843598 and up |
| -2A | 65829-005 | . . WEB - (Non Entegra) | 1 | |
| -2A | 65829-006 | . . WEB - (Entegra) | 1 | 2843598 and up |
| 3 | 62438-000 | . . CHANNEL - Upper cockpit assy, firewall | 1 | |
| 4 | 63436-000 | . . CHANNEL - Upper cockpit, firewall, left | 1 | |
| 4A | 63436-001 | . . CHANNEL - Upper cockpit, firewall, right | 1 | |
| 5 | 67266-002 | . . BEAM - Upper cockpit, firewall (Non Entegra) | 1 | |
| 5 | 67266-004 | . . BEAM - Upper cockpit, firewall (Entegra) | 1 | 2843598 and up |
| -5A | 101962-002 | . . BRACKET ASSY - DC-50, beam, right (Entegra) | 1 | 2843598 and up |
| -5B | 101975-002 | . . SUPPORT - Bracket, inner (Entegra) | 1 | 2843598 and up |
| -5C | 101975-003 | . . SUPPORT - Bracket, outer (Entegra) | 1 | 2843598 and up |
| -5D | 101980-002 | . . ANGLE - support, inner (Entegra) | 1 | 2843598 and up |
| -5E | 101980-003 | . . ANGLE - support, outer (Entegra) | 1 | 2843598 and up |
| -5F | 62433-000 | . . PLATE - beam, bottom left & right | 2 | |
| -5G | 62434-000 | . . PLATE - beam, top | 1 | |
| 6 | 63423-004 | . . CHANNEL ASSY - Toe brake reinforcement | 1 | |
| 7 | 79553-000 | . FITTING - Upper forward cockpit, sta. 73, left | 1 | |
| -7A | 79553-001 | . FITTING - Upper forward cockpit, sta. 73, right | 1 | |
| 8 | 39769-002 | . PLATE ASSY - Voltage regulator support, left (Without Entegra) | 1 | 2843001 thru 2843541 |
| 8 | 101414-002 | . PLATE ASSY - Voltage regulator support, left (Without Entegra) | 1 | 2843542 and up |
| 8 | 101959-002 | . PLATE ASSY - Voltage regulator support, left (With Entegra) | 1 | 2843598 and up |
| 9 | 79795-004 | . FLANGE - Nose cowl attaching, left | 1 | |
| 10 | 79795-003 | . FLANGE - Nose cowl attaching, right | 1 | |
| 11 | 63285-000 | . ANGLE - Firewall | 1 | |
| 12 | 67259-002 | . ANGLE - Stiffener, upper forward cockpit (Without Entegra) | 2 | |
| 13 | 67258-000 | . ANGLE - Stiffener, upper forward cockpit (Without Entegra) | 1 | |
| 14 | 76137-002 | . CHANNEL - Sta. 73.04 | 1 | |
| 15 | 79739-002 | . FITTING ASSY - Engine mount center, left | 1 | |
| -15A | 79739-003 | . FITTING ASSY - Engine mount center, right | 1 | |
| 15B | 62425-002 | . . LUG | 1 | |
| 16 | 76489-002 | . LONGERON - Upper, left | 1 | |
| 17 | 62473-002 | . LONGERON - Upper, right, front | 1 | |
| 18 | 62485-000 | . CHANNEL - Left | 1 | |
| -18A | 62485-001 | . CHANNEL - Right | 1 | |
| -18B | 99835-004 | . BRACKET ASSY - Right channel (Without Entegra) | 1 | |
| -18B | 101961-002 | . BRACKET ASSY - Right channel (With Entegra) | 1 | 2843598 and up |
| -18C | 104884-002 | . BRACKET ASSY - Regulator (With Entegra) | 1 | 2843598 and up |
| 19 | 76136-000 | . WEB - Fuselage, left side | 1 | |
| 20 | 62499-002 | . WEB ASSY - Fuselage, right side | 1 | |
| 21 | 62653-006 | . FRAME ASSY - Upper forward cockpit, left | 1 | |
| 22 | 62674-001 | . ZEE - Upper forward cockpit, right | 1 | |
| 24 | 68272-002 | . PLATE - Control wheel | 2 | |
| 25 | 68272-003 | . PLATE - Control wheel | 4 | |
| 26 | 68272-004 | . PLATE - Control wheel (Refer to Piper Service Bulletin #1040 - latest revision) | 2 | |
| -26A | 520-012 | . SCREW | 8 | |
| -26B | 690-618 | . WASHER - (NAS1149FN816P) | 8 | |

-ITEM NOT ILLUSTRATED

When ordering, always specify Part Number, Description, and Serial Number of Aircraft

Revised: March 10, 2007

| Figure and Index Number | Part Number | Nomenclature | No. Req. | Serial Numbers Affected |
|---|---|---|---|---|
| 8- | | | | |
| -26C | 404-529 | . NUT - (MS21042-08) | 8 | |
| 27 | 68273-002 | . BUSHING - Control wheel | 2 | |
| 28 | 484-792 | . O-RING - Control wheel (MS28775-218) | 2 | |
| 29 | 38999-002 | . BRACKET ASST - Instrument Panel, left | 1 | |
| -29A | 38999-003 | . BRACKET ASST - Instrument Panel, right | 1 | |
| 30 | 79332-000 | . BRACKET ASST - Instrument Panel, left (Without Entegra) | 1 | |
| -30A | 79424-000 | . BRACKET ASST - Instrument Panel, right (Without Entegra) | 1 | |
| 31 | 89251-002 | . SUPPORT ASSY T-BAR (Non Entegra) | 1 | |
| 32 | 79795-002 | . FLANGE - Nose cowl attaching, center | 1 | 2843001 thru 2843081 |
| 32 | 79795-012 | . FLANGE - Nose cowl attaching, center | 1 | 2843082 and up |
| 33 | 79863-003 | . CONTROL ASSY - Heat and defroster | 1 | |
| -40 | 69312-007 | HAND BRAKE ASSY | 1 | |
| -41 | 67136-005 | . SUPPORT ASSY - Hand brake | 1 | |
| 42 | 67137-000 | . . CHANNEL ASSY - Brake support, left | 1 | |
| 43 | 63354-000 | . . . RATCHET - Brake handle | 1 | |
| 44 | 67138-000 | . . CHANNEL ASSY - Brake support, right | 1 | |
| 45 | 67139-000 | . . CHANNEL - Brake support, forward | 1 | |
| 46 | 89300-007 | . . CHANNEL ASSY - Brake support, aft | 1 | |
| 47 | 85492-009 | . PANEL ASSY - Copilot Instruments, VFR Avionics (w/o intercom) (See figure 36 for Panel Installation) | RF | 2843001 thru 2843076 |
| 47 | 85492-021 | . PANEL ASSY - Copilot Instruments, VFR Avionics (w/o intercom) (See figure 36 for Panel Installation) | RF | 2843067 thru 2843076 |
| 47 | 101204-006 | . PANEL ASSY - Copilot Instruments, VFR Avionics (See figure 36 for Panel Installation) | RF | 2843077 thru 2843202 |
| 47 | 101271-008 | . PANEL ASSY - Copilot Instruments, VFR Avionics (See figure 36 for Panel Installation) | RF | 2843203 and up |
| 48 | 85492-010 | . PANEL ASSY - Pilot Instruments, VFR Avionics (See figure 36 for Panel Installation) | RF | 2843001 thru 2843076 |
| 48 | 101204-009 | . PANEL ASSY - Pilot Instruments, VFR Avionics (See figure 36 for Panel Installation) | RF | 2843077 thru 2843202 |
| 48 | 101271-005 | . PANEL - Pilot Instruments, VFR Avionics (See figure 36 for Panel Installation) | RF | 2843203 and up |
| -49 | 101950-003 | . PANEL - Entegra Instrument (See figure 36 for Panel Installation) | RF | 2843598 and up |

* For optional equipment panel assy cutouts reference the Avionics Locator drawings 101203, 101276, or 104491 to determine the correct panel assy to order.

NOTES:

1. SERIAL NUMBER OF AIRCRAFT MUST BE SUPPLIED WHEN ORDERING THIS PART.

-ITEM NOT ILLUSTRATED

When ordering, always specify Part Number, Description, and Serial Number of Aircraft

THIS PAGE INTENTIONALLY LEFT BLANK

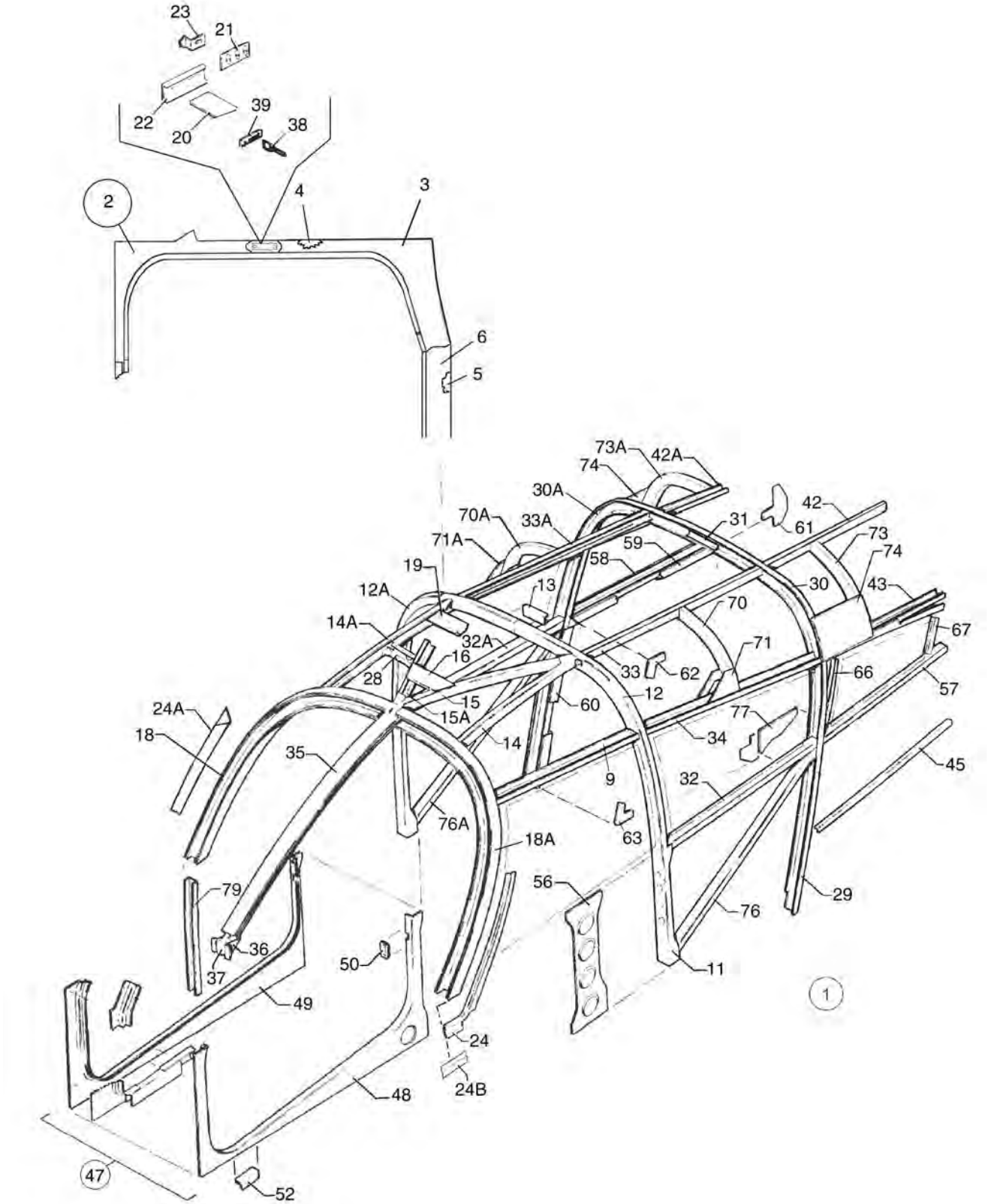


Figure 9. Fuselage Upper Center Cockpit Assembly

| Figure and Index Number | Part Number | Nomenclature | No. Req. | Serial Numbers Affected |
|---|---|---|---|---|
| 9- | 76470 (ED) | DRAWING - Fuselage Assy (Complete) | | |
| 1 | 76470-005 | UPPER COCKPIT ASSY - Center, Entegra | RF | 2843598 and up |
| 1 | 76470-004 | UPPER COCKPIT ASSY - Center, Non Entegra | RF | |
| 2 | 79561-027 | . PAN ASSY - Upper Center | 1 | |
| | | (Refer to Piper Service Bulletin #996 - latest revision) | | |
| 3 | 79561-009 | . . PAN - Outer | 1 | |
| 4 | 79561-010 | . . PAN - Inner | 1 | |
| 5 | 79561-008 | . . PAN - Inner | 1 | |
| 6 | 79561-007 | . . PAN - Outer | 1 | |
| -7 | 79561-004 | . . JAMB - Door, forward | 1 | |
| -8 | 76467-004 | . . CHANNEL - Door frame splice | 1 | |
| 9 | 76132-003 | . CHANNEL - Left front window, top | 1 | |
| -10 | 62426-006 | . FRAME ASSY - Fuselage, sta 108.16 | 1 | |
| 11 | 62426-007 | . . FRAME ASSY | 1 | |
| 12 | 62427-000 | . . . CHANNEL - Fuselage frame, left | 1 | |
| 12A | 62427-002 | . . . CHANNEL - Fuselage frame, right | 1 | |
| 13 | 62429-000 | . . . CHANNEL - Splice plate | 1 | |
| 14 | 76140-003 | . CHANNEL - Upper center cockpit, left | 1 | |
| 14A | 76140-004 | . CHANNEL - Upper center cockpit, right | 1 | |
| 15 | 66969-002 | . CHANNEL - Upper center fuselage, left | 1 | |
| 15A | 66969-003 | . CHANNEL - Upper center fuselage, right | 1 | |
| 16 | 79161-000 | . DOUBLER - Antenna | 1 | |
| -17 | 76468-000 | . FRAME ASSY - Canted, fuselage, sta 85.6 | 1 | |
| 18 | 76468-002 | . . CHANNEL - Left | 1 | |
| 18A | 76468-003 | . . CHANNEL - Right | 1 | |
| 19 | 76239-000 | . CHANNEL - Upper cockpit | 1 | |
| 20 | 76365-000 | . PLATE - Door latch | 1 | |
| 21 | 69738-000 | . PLATE ASSY - Door latch | 1 | |
| 22 | 69740-002 | . CHANNEL - Door latch | 1 | |
| 23 | 69739-000 | . CLIP - Door latch | 1 | |
| 24 | 69891-014 | RETAINER - Windshield, left, lower | 1 | |
| 24A | 69891-015 | RETAINER - Windshield, right, lower | 1 | |
| 24B | 69891-018 | RETAINER ASSY - Windshield, left | 1 | |
| -24C | 69891-017 | RETAINER ASSY - Windshield, right | 1 | |
| 28 | 63038-002 | CHANNEL - Support | 1 | |
| 29 | 62412-002 | FRAME ASSY - Fuselage, sta. 128.737, upper | 1 | |
| 30 | 62410-000 | . CHANNEL - Upper frame, left | 1 | |
| -30A | 62410-001 | . CHANNEL - Upper frame, right | 1 | |
| 31 | 62430-000 | . CHANNEL - Splice plate | 1 | |
| 32 | 65572-000 | LONGERON - Upper center cockpit, left | 1 | |
| 32A | 65572-001 | LONGERON - Upper center cockpit, right | 1 | |
| 33 | 62477-000 | CHANNEL - Upper center cockpit, left | 1 | |
| -33A | 62477-001 | CHANNEL - Upper center cockpit, right | 1 | |
| 34 | 67262-002 | CHANNEL - Upper center cockpit, left | 1 | |
| -34A | 67262-003 | CHANNEL - Upper center cockpit, right | 1 | |
| 35 | 62509-004 | HAT ASSY - Windshield | 1 | |
| 36 | 62505-000 | . BRACKET - Windshield | 1 | |
| 37 | 62423-000 | . FITTING - Upper engine mount | 1 | |
| 38 | 63037-000 | LOOP ASSY - Door latch | 1 | |
| 39 | 79234-000 | PLATE - Door latch | 1 | |
| 42 | 62639-000 | CHANNEL - Upper center cockpit, left | 1 | |
| 42A | 62639-001 | CHANNEL - Upper center cockpit, right | 1 | |
| 43 | 67291-000 | STRINGER - Upper center cockpit, left | 1 | |
| -43A | 67291-001 | STRINGER - Upper center cockpit, right | 1 | |

-ITEM NOT ILLUSTRATED

When ordering, always specify Part Number, Description, and Serial Number of Aircraft

| Figure and Index Number | Part Number | Nomenclature | No. Req. | Serial Numbers Affected |
|---|---|---|---|---|
| 9- | | | | |
| 45 | 62677-000 | STIFFENER - Left side, rear | 1 | |
| 47 | 76467-000 | PAN ASSY - Lower, upper cockpit | 1 | |
| 48 | 76467-003 | . PAN - Inboard | 1 | |
| 49 | 76467-002 | . PAN - Outboard | 1 | |
| 50 | 79639-002 | . CATCH ASSY - Door frame | 1 | |
| 52 | 62656-000 | . ANGLE ASSY - Door holder | 1 | |
| 56 | 62644-003 | WEB - Upper center fuselage, left | 1 | |
| 57 | 62637-000 | CHANNEL - Fuselage rear, left | 1 | |
| 58 | 62635-000 | CHANNEL - Baggage door frame, top, inner | 1 | |
| 59 | 62634-000 | CHANNEL - Baggage door frame, top, outer | 1 | |
| 60 | 62636-000 | CHANNEL - Baggage door frame, front | 1 | |
| 61 | 76279-000 | GUSSET - Baggage door frame, top, rear | 1 | |
| 62 | 62632-000 | GUSSET - Baggage door frame, top, front | 1 | |
| 63 | 62633-000 | GUSSET - Baggage door frame, bottom, front | 1 | |
| 66 | 76261-000 | ANGLE - Support, left | 1 | |
| -66A | 76261-001 | ANGLE - Support, right | 1 | |
| 67 | 76262-000 | ANGLE - Support, left | 1 | |
| -69 | 62571-000 | GUSSET - Baggage door frame, bottom, rear | 1 | |
| 70 | 99690-000 | CHANNEL - Upper cockpit, left | 1 | |
| 70A | 99690-001 | CHANNEL - Upper cockpit, right | 1 | |
| 71 | 99692-000 | DOUBLER - Shoulder harness, left | 1 | |
| 71A | 99692-001 | DOUBLER - Shoulder harness, right | 1 | |
| 73 | 99691-000 | CHANNEL - Upper cockpit, rear, left | 1 | |
| 73A | 99691-001 | CHANNEL - Upper cockpit, rear, right | 1 | |
| 74 | 99693-000 | DOUBLER - Shoulder harness, rear, left & right | 2 | |
| -75 | 65573-002 | CHANNEL ASSY | 1 | |
| -75A | 65574-002 | CHANNEL ASSY | 1 | |
| 76 | 65570-000 | . CHANNEL - Upper center cockpit, left | 1 | |
| 76A | 65570-001 | . CHANNEL - Upper center cockpit, right | 1 | |
| 77 | 65117-000 | . GUSSET - Upper center cockpit, left | 1 | |
| -77A | 65116-000 | . GUSSET - Upper center cockpit, right | 1 | |
| -78 | 62697-002 | CHANNEL ASSY | 1 | |
| 79 | 62483-002 | . CHANNEL - Right door, front, sta. 72.6 | 1 | |

-ITEM NOT ILLUSTRATED

THIS PAGE INTENTIONALLY LEFT BLANK

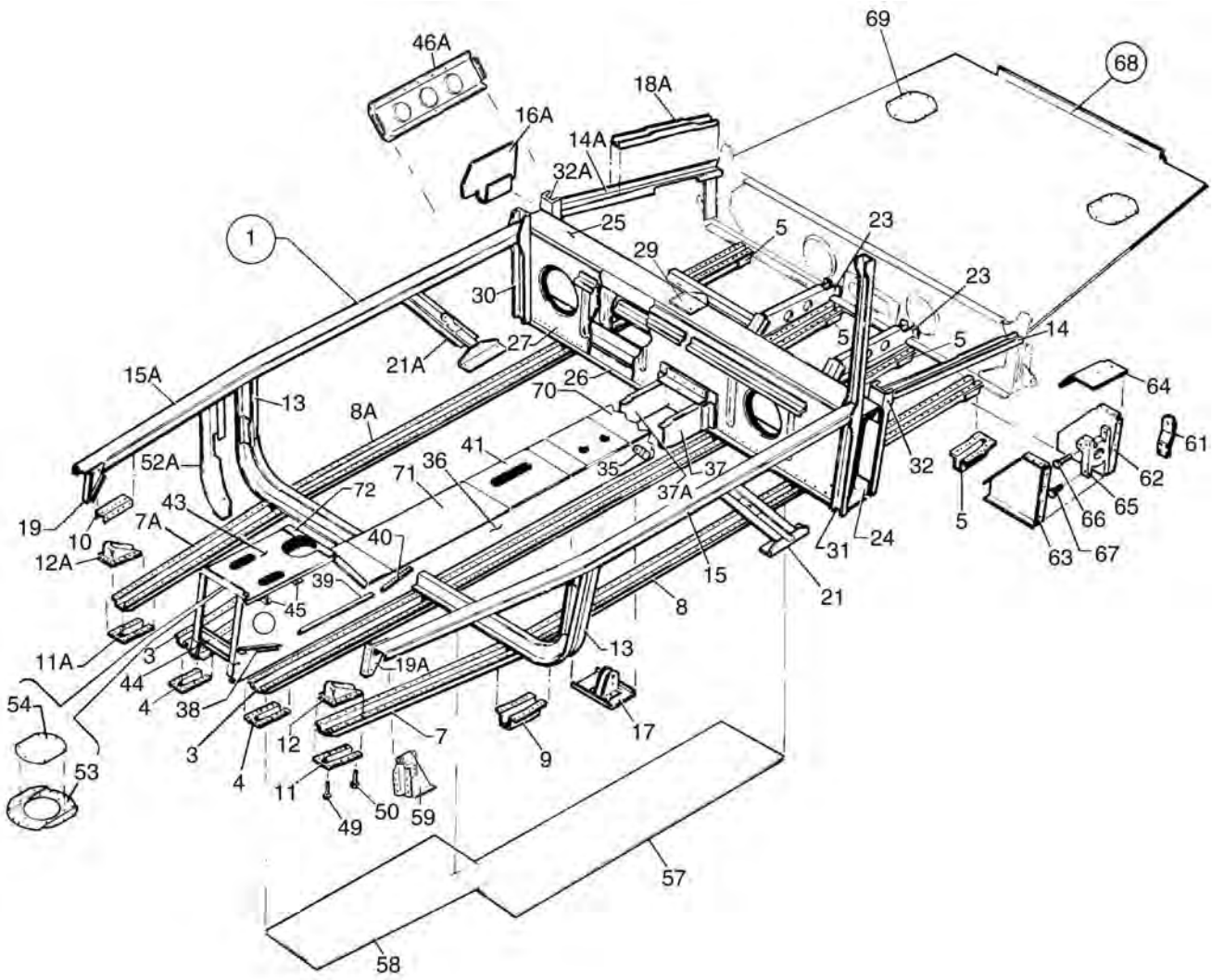


Figure 10. Fuselage Lower Forward Cockpit Assembly

| Figure and Index Number | Part Number | Nomenclature | No. Req. | Serial Numbers Affected |
|---|---|---|---|---|
| 10- | 76470 (ED) | DRAWING - Fuselage Assy (Complete) | | |
| | 84278 (AB) | DRAWING - Interior Installation | | |
| 1 | 76470-005 | COCKPIT ASSY - Lower forward, Entegra | RF | 2843598 and up |
| 1 | 76470-004 | COCKPIT ASSY - Lower forward, Non Entegra | RF | |
| 3 | 76114-000 | . HAT | 2 | |
| 4 | 62543-000 | . FAIRING - Front, left, inboard | 2 | |
| 5 | 62554-000 | . FAIRING - Rear | 4 | |
| 7 | 62528-000 | . HAT - Front, left | 1 | |
| 7A | 62528-001 | . HAT - Front, right | 1 | |
| 8 | 76115-000 | . HAT - Rear, left | 1 | |
| -8A | 76115-001 | . HAT - Rear, right | 1 | |
| 9 | 62558-000 | . FAIRING - Center, left | 1 | |
| -9A | 62558-001 | . FAIRING - Center, right | 1 | |
| 10 | 62582-000 | . CHANNEL - Lower cockpit, left & right | 2 | |
| 11 | 62544-000 | . FAIRING - Front, left, outboard | 1 | |
| 11A | 62544-001 | . FAIRING - Front, right, outboard | 1 | |
| 12 | 62441-000 | . FITTING - Engine, lower, left | 1 | |
| 12A | 62441-001 | . FITTING - Engine, lower, right | 1 | |
| 13 | 76126-000 | . FRAME ASSY - Fuselage, sta. 73.04 | 1 | |
| 14 | 62525-000 | . STRINGER - Rear of spar box, left | 1 | |
| 14A | 62525-001 | . STRINGER - Rear of spar box, right | 1 | |
| 15 | 76490-002 | . LONGERON - Lower cockpit, left | 1 | |
| 15A | 76490-003 | . LONGERON - Lower cockpit, right | 1 | |
| -16 | 62542-000 | . GUSSET - Lower cockpit, left | 1 | |
| 16A | 62542-001 | . GUSSET - Lower cockpit, right | 1 | |
| 17 | 65636-000 | . BRACKET ASSY - Pulley mounting | 1 | |
| -18 | 62551-000 | . CHANNEL - Lower cockpit, left | 1 | |
| 18A | 62551-001 | . CHANNEL - Lower cockpit, right | 1 | |
| 19 | 62581-000 | . BRACKET - Lower cockpit, right | 1 | |
| 19A | 62581-001 | . BRACKET - Lower cockpit, left | 1 | |
| 21 | 96890-000 | . HAT ASSY - Seat belt attachment, left | 1 | |
| 21A | 96890-001 | . HAT ASSY - Seat belt attachment, right | 1 | |
| 23 | 62763-000 | . SUPPORT - Torque shaft center, left & right | 2 | |
| 24 | 99127-004 | . SPAR BOX ASSY - Spar, lower cockpit | 1 | |
| 25 | 62539-000 | . . CHANNEL - Spar box, top | 1 | |
| 26 | 62540-000 | . . CHANNEL - Spar box, bottom | 1 | |
| 27 | 99129-003 | . . WEB - Spar box, front | 1 | |
| -28 | 99123-000 | . . WEB - Spar box, rear | 1 | |
| 29 | 99045-000 | . . BRACKET - Flap return spring | 1 | |
| 30 | 67286-000 | . . CHANNEL - Spar box, right | 1 | |
| 31 | 62546-000 | . . CHANNEL - Spar box, left | 1 | |
| 32 | 62428-000 | . . CHANNEL - Spar box, left | 1 | |
| 32A | 62428-001 | . . CHANNEL - Spar box, right | 1 | |
| -33 | 76217-000 | . TUNNEL ASSY | 1 | |
| -34 | 76217-002 | . . CHANNEL ASSY - Left | 1 | |
| -34A | 76217-003 | . . CHANNEL ASSY - Right | 1 | |
| 35 | 96887-002 | . . . BRACKET - Seat belt attachment, left | 1 | |
| -35A | 96887-000 | . . . BRACKET - Seat belt attachment, right | 1 | |
| 36 | 76218-000 | . . . CHANNEL - Tunnel, side, left | 1 | |
| -36A | 76218-001 | . . . CHANNEL - Tunnel, side, right | 1 | |
| 37 | 76119-000 | . . . CHANNEL - Tunnel, side extension, left | 1 | |
| 37A | 76119-001 | . . . CHANNEL - Tunnel, side extension, right | 1 | |
| 38 | 62603-000 | . . . ANGLE - Tunnel, heat duct, left | 1 | |
| -38A | 62603-001 | . . . ANGLE - Tunnel, heat duct, right | 1 | |

-ITEM NOT ILLUSTRATED

When ordering, always specify Part Number, Description, and Serial Number of Aircraft

| Figure and Index Number | Part Number | Nomenclature | No. Req. | Serial Numbers Affected |
|---|---|---|---|---|
| 10- | | | | |
| 39 | 99417-000 | . . . ANGLE - Tunnel, heat duct, left & right | 2 | |
| 40 | 99417-000 | . . . ANGLE - Tunnel, heat duct, left & right | 2 | |
| 41 | 62598-000 | . . PLATE ASSY - Tunnel | 1 | |
| 43 | 62601-003 | . . PLATE - Tunnel, top front | 1 | |
| 44 | 62620-000 | . . BRACKET - Pulley | 2 | |
| 45 | 62664-000 | . . ZEE ASSY - Tunnel | 2 | |
| -46 | 65126-000 | . STIFFENER - Lower cockpit, right | 1 | |
| 46A | 65126-001 | . STIFFENER - Lower cockpit, left | 1 | |
| 49 | 415-321 | . BOLT - (MS27039-1-11) | 4 | |
| -49A | 690-657 | . WASHER - (NAS1149D0363H) | 4 | |
| -49B | 404-526 | . NUT - (MS21042-3) | 4 | |
| 50 | 415-323 | . BOLT - (MS27039-1-13) | 8 | |
| -50A | 690-657 | . WASHER - (NAS1149D0363H) | 8 | |
| -50B | 404-526 | . NUT - (MS21042-3) | 8 | |
| -52 | 76120-000 | . CHANNEL - Sta. 67.68, left | 1 | |
| 52A | 76120-001 | . CHANNEL - Sta. 67.68, right | 1 | |
| 53 | 36565-003 | . DOUBLER ASSY - Transponder antenna access | 1 | |
| 54 | 36565-002 | . PLATE - Transponder antenna access | 1 | |
| 57 | 96684-000 | . FLOORBOARD - Sta. 74 to sta. 105, left and right | 2 | |
| 58 | 76123-004 | . FLOORBOARD - Front, left | 1 | |
| -58A | 76123-005 | . FLOORBOARD - Front, right | 1 | |
| 59 | 79258-000 | . BRACKET ASSY - Rudder pedal stop, left | 1 | |
| -59A | 79258-001 | . BRACKET ASSY - Rudder pedal stop, right | 1 | |
| -60 | 62688-008 | . SUPPORT ASSY | 1 | |
| -60A | 62688-009 | . SUPPORT ASSY | 1 | |
| 61 | 79319-000 | . . BRACKET - Seat belt attachment | 1 | |
| 62 | 62536-004 | . . SUPPORT - Rear seat bottom, left | 1 | |
| -62A | 62536-005 | . . SUPPORT - Rear seat bottom, right | 1 | |
| 63 | 62550-000 | . . SUPPORT - Rear seat bottom, left | 1 | |
| -63A | 62550-001 | . . SUPPORT - Rear seat bottom, right | 1 | |
| 64 | 62583-000 | . . PLATE - Flap torque tube support, left | 1 | |
| -64A | 62583-001 | . . PLATE - Flap torque tube support, right | 1 | |
| 65 | 62421-000 | . . FITTING - Flap torque tube assembly, left | 1 | |
| -65A | 62421-001 | . . FITTING - Flap torque tube assembly, right | 1 | |
| 66 | 401-269 | . . BOLT - (AN3-10A) | 1 | |
| -66A | 690-612 | . . WASHER - (AN960-10) | 2 | |
| -66B | 404-526 | . . NUT - (MS20365-1032C) | 1 | |
| 67 | 401-266 | . . BOLT - (AN3-5A) | 3 | |
| -67A | 690-612 | . . WASHER - (AN960-10) | 3 | |
| -67B | 690-609 | . . WASHER - (AN960-10L) | 3 | |
| -67C | 404-526 | . . NUT - (MS20365-1032C) | 3 | |
| 68 | 66795-000 | . FLOOR ASSY - baggage | RF | |
| 69 | 62109-000 | . . COVER - Inspection access | 2 | |
| 70 | 76121-000 | PLATE - Tunnel, top rear | 1 | |
| 71 | 63287-000 | PLATE - Tunnel, top, center rear | 1 | |
| 72 | 63288-000 | PLATE - Tunnel, top, center front | 1 | |

-ITEM NOT ILLUSTRATED

When ordering, always specify Part Number, Description, and Serial Number of Aircraft

THIS PAGE INTENTIONALLY LEFT BLANK

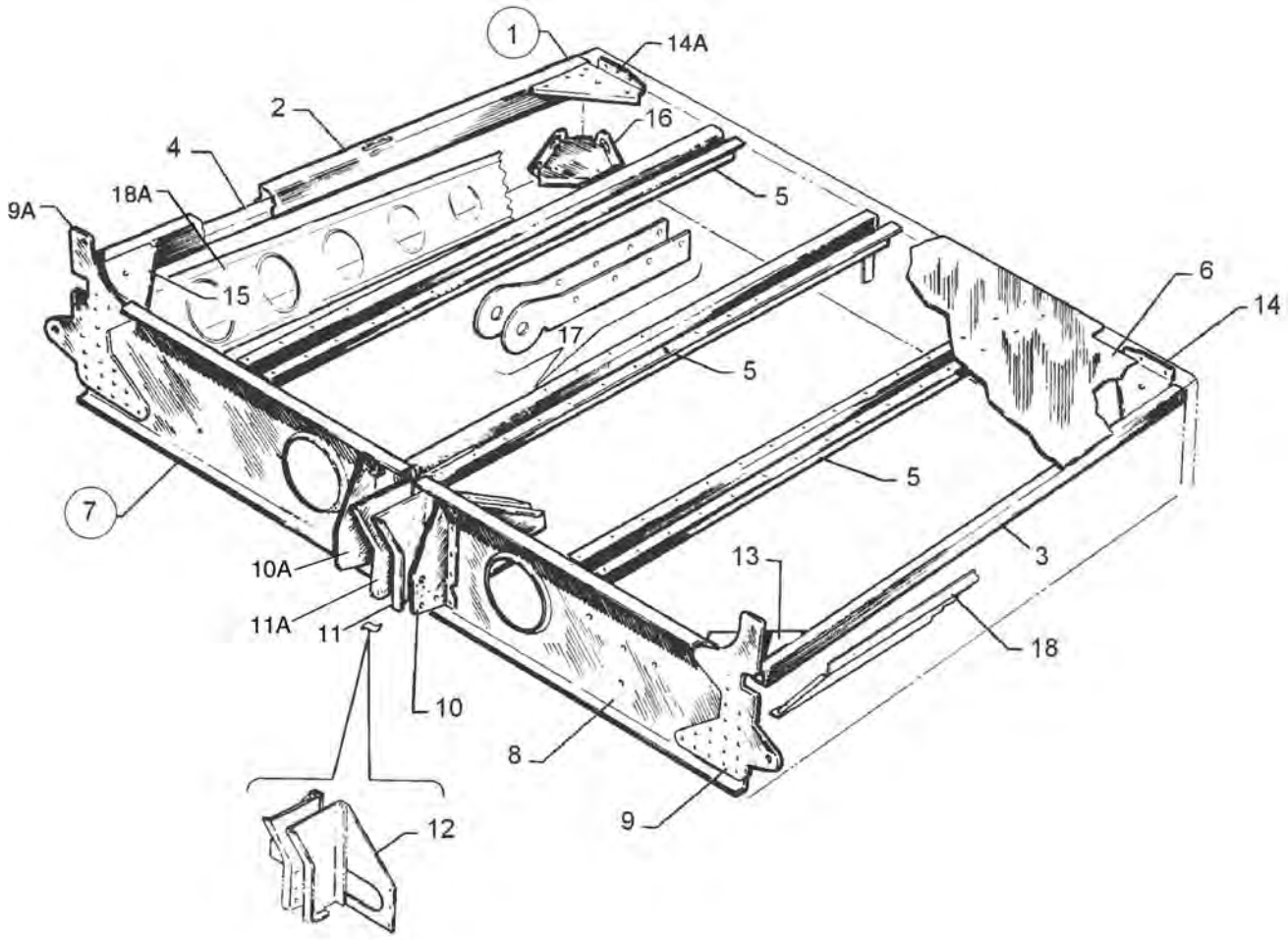


Figure 11. Fuselage Lower Aft Cockpit Assembly

| Figure and Index Number | Part Number | Nomenclature | No. Req. | Serial Numbers Affected |
|---|---|---|---|---|
| 11- | 76470 (ED) | DRAWING - Fuselage Assy (Complete) | | |
| 1 | 76470-005 | LOWER COCKPIT ASSY - Aft (Entegra) | RF | 2843598 and up |
| 1 | 76470-004 | LOWER COCKPIT ASSY - Aft (Non Entegra) | RF | |
| 2 | 66796-000 | . CHANNEL - Baggage compartment, right (Used if baggage door has push button latch) | 1 | |
| 3 | 62537-000 | . STRINGER ASSY - Left | 1 | |
| 4 | 62534-000 | . CHANNEL - Right | 1 | |
| 5 | 62531-000 | . HAT - Baggage floor | 3 | |
| 6 | 66795-000 | . FLOOR ASSY - Baggage compartment (Used if baggage door has push button latch) | RF | |
| 7 | 62695-002 | . FRAME ASSY - Lower, sta. 128.737 (Non Entegra) | 1 | |
| 7 | 62695-005 | . FRAME ASSY - Lower, sta. 128.737 (Entegra) | 1 | 2843598 and up |
| 8 | 62411-002 | . . CHANNEL - Lower cockpit (Non Entegra) | 1 | |
| 8 | 62411-003 | . . CHANNEL - Lower cockpit (Entegra) | 1 | 2843598 and up |
| 9 | 62448-000 | . . FITTING - Lower cockpit, left | 1 | |
| 9A | 62448-001 | . . FITTING - Lower cockpit, right | 1 | |
| 10 | 62563-002 | . . BRACKET - Lower cockpit, left | 1 | |
| 10A | 62563-001 | . . BRACKET - Lower cockpit, right | 1 | |
| 11 | 35142-000 | . . BRACKET - Rear seat belt support, left | 1 | |
| 11A | 35142-001 | . . BRACKET - Rear seat belt support, right | 1 | |
| 12 | 62566-000 | . . DOUBLER - Seat belt attachment | 1 | |
| 13 | 62529-000 | . BRACKET - Baggage compartment | 1 | |
| 14 | 62618-000 | . BRACKET - Baggage compartment, left | 1 | |
| 14A | 62618-001 | . BRACKET - Baggage compartment, right | 1 | |
| 15 | 62619-000 | . BRACKET - Baggage compartment, right | 1 | |
| 16 | 65383-000 | . DOUBLER ASSY - Step | 1 | |
| 17 | 99699-000 | . CHANNEL - Seat belt attachment | 1 | |
| 18 | 65128-000 | . DOUBLER - Baggage compartment, left | 1 | |
| 18A | 65128-001 | . DOUBLER - Baggage compartment, right | 1 | |

-ITEM NOT ILLUSTRATED

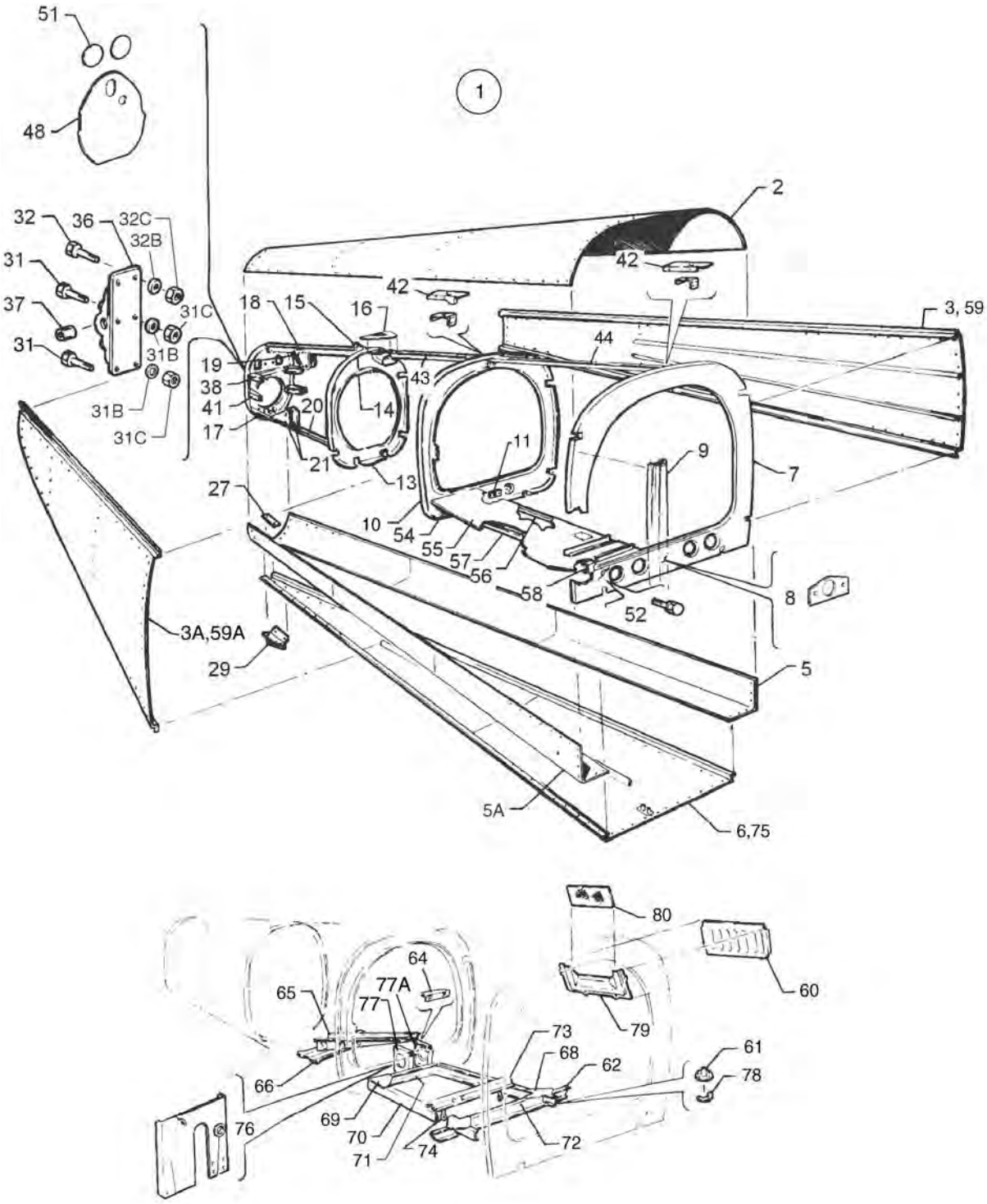


Figure 12. Fuselage Aft Section

| Figure and Index Number | Part Number | Nomenclature | No. Req. | Serial Numbers Affected |
|---|---|---|---|---|
| 12- | 76470 (ED) | DRAWING - Fuselage Assy (Complete) | | |
| | 99549 (AB) | DRAWING - Condenser Frame Installation | | |
| 1 | 99466-024 | FUSELAGE ASSY - Aft section | 1 | |
| 2 | 99468-003 | . SKIN - Upper | 1 | |
| 3 | 99470-000 | . SKIN ASSY - Side, left | 1 | |
| | | (Used when fresh air ventilation system is installed) | | |
| 3A | 99470-001 | . SKIN ASSY - Side, right | 1 | |
| -3B | 100697-004 | . PLATE - Aircraft name | 1 | |
| 5 | 99471-002 | . SKIN - Lower side, left | 1 | |
| 5A | 99471-003 | . SKIN - Lower side, right | 1 | |
| 6 | 99469-003 | . SKIN ASSY - Lower center | 1 | |
| 7 | 65640-008 | . FRAME ASSY - Fuselage | 1 | |
| 8 | 62665-002 | . . FAIRLEADS | 3 | |
| 9 | 62630-000 | . . CHANNEL - Baggage door, right | 1 | |
| 10 | 62443-000 | . BULKHEAD ASSY - Fuselage, sta. 191.00 | 1 | |
| 11 | 62662-000 | . . FAIRLEAD | 1 | |
| -12 | 99467-003 | . FRAME ASSY | 1 | |
| 13 | 62444-005 | . . BULKHEAD ASSY - Fuselage, sta. 228.30 | 1 | |
| 14 | 62753-000 | . . . BRACKET - Stabilator trim | 1 | |
| 15 | 62453-000 | . . . FITTING - Frame, sta. 228.30 | 1 | |
| 16 | 79272-000 | . . . DOUBLER - Frame, top, sta. 228.30 | 1 | |
| 17 | 62445-000 | . . BULKHEAD ASSY - Fuselage, sta. 255.125 | 1 | |
| 18 | 62451-000 | . . STRINGER ASSY - Hat section | 1 | |
| 19 | 62452-000 | . . . BRACKET - Stabilator pulley, left | 1 | |
| -19A | 62452-001 | . . . BRACKET - Stabilator pulley, right | 1 | |
| 20 | 62455-000 | . . STRINGER ASSY - Hat section | 1 | |
| 21 | 62457-000 | . . . BRACKET - Stabilator pulley, left | 1 | |
| -21A | 62457-001 | . . . BRACKET - Stabilator pulley, right | 1 | |
| 27 | 62471-000 | . . SPACER - Tail skid | 2 | |
| 29 | 66769-000 | . . SKID ASSY - Tail | 1 | |
| 31 | 402-897 | . . BOLT - (NAS464P3A4) | 8 | |
| -31A | 690-612 | . . WASHER - (NAS1149F0363P) | 12 | |
| 31B | 690-609 | . . WASHER - (NAS1149F0332P) | 8 | |
| 31C | 404-556 | . . NUT - (MS21045-L3) | 8 | |
| 32 | 402-890 | . . BOLT - (NAS464P3A5) | 4 | |
| -32A | 690-612 | . . WASHER - (NAS1149F0363P) | 4 | |
| 32B | 690-609 | . . WASHER - (NAS1149F0332P) | 4 | |
| 32C | 404-556 | . . NUT - (MS21045-L3) | 4 | |
| 36 | 62645-004 | . . FITTING ASSY - Stabilator attachment | 2 | |
| -36A | 553-266 | . . . BOLT - Elevator stop | 2 | |
| -36B | 404-224 | . . . NUT - (AN315-3R) | 2 | |
| 37 | 452-394 | . . . BEARING - (DW4K2-FS464) | 1 | |
| 38 | 62413-000 | . . FITTING ASSY - Upper, left | 1 | |
| -38A | 62413-001 | . . FITTING ASSY - Upper, right | 1 | |
| 41 | 62414-000 | . . FITTING ASSY - Lower, left | 1 | |
| -41A | 62414-001 | . . FITTING ASSY - Lower, right | 1 | |
| 42 | 99813-002 | . DOUBLER - Antenna mount, forward | 1 | |
| 43 | 79267-000 | . STRINGER - Top, sta. 191 to sta. 228.30 | 1 | |
| 44 | 65114-000 | . STRINGER - Top, sta. 156 to sta. 191 | 1 | |
| 48 | 65494-000 | . PLATE ASSY - Aft fuselage closeout | 1 | |
| 51 | 63078-006 | . DISC - Closeout | 2 | |
| 52 | 400-438 | . BOLT - (AN3-4A) | 4 | |
| -52A | 690-657 | . WASHER - (NAS1149D0363H) | 4 | |
| 54 | 85417-002 | . SHELF ASSY - Battery | 1 | 2843001 thru 2843414 |

-ITEM NOT ILLUSTRATED

When ordering, always specify Part Number, Description, and Serial Number of Aircraft

| Figure and Index Number | Part Number | Nomenclature | No. Req. | Serial Numbers Affected |
|---|---|---|---|---|
| 12- | | | | |
| 55 | 85416-002 | . . WEB - Battery shelf | 1 | 2843001 thru 2843414 |
| 55 | 85416-003 | . . WEB - Battery shelf | 1 | 2843415 and up |
| 56 | 62463-000 | . . CHANNEL - Battery shelf, inboard | 1 | |
| 57 | 62464-000 | . . CHANNEL - Battery shelf, outboard | 1 | |
| 58 | 62465-000 | . . CHANNEL - Battery shelf, front | 3 | |
| 59 | 99549-008 | SKIN ASSY - left side (Used if air conditioning is installed) | 1 | |
| 59A | 99549-009 | SKIN ASSY - right side (Used if air conditioning is installed) | 1 | |
| 60 | 99559-000 | . LOUVER - Air conditioning exhaust, left (Used if air conditioning is installed) | 1 | |
| -60A | 99559-001 | . LOUVER - Air conditioning exhaust, right (Used if air conditioning is installed) | 1 | |
| 61 | 99609-000 | VENT ASSY - Evaporator (Used if air conditioning is installed) | 1 | |
| 62 | 99487-000 | BRACE - Condenser frame, left (Used if air conditioning is installed) | 1 | |
| -62A | 99487-001 | BRACE - Condenser frame, right (Used if air conditioning is installed) | 1 | |
| -63 | 99626-000 | SUPPORT ASSY - (Used if air conditioning is installed) | 1 | |
| 64 | 99555-000 | . BRACKET ASSY - Brace (Used if air conditioning is installed) | 1 | |
| 65 | 99558-000 | . BRACKET ASSY -Motor mount, condenser actuator (Used if air conditioning is installed) | 1 | |
| 66 | 99545-000 | . BRACKET ASSY - Motor sport (Used if air conditioning is installed) | 1 | |
| -67 | 99549-016 | SKIN ASSY - Condenser frame (Used if air conditioning is installed) | 1 | |
| 68 | 99488-000 | . GUSSET - Condenser frame, fwd (Used if air conditioning is installed) | 2 | |
| 69 | 99280-000 | . GUSSET - Condenser frame, aft left (Used if air conditioning is installed) | 1 | |
| -69A | 99280-001 | . GUSSET - Condenser frame, aft right (Used if air conditioning is installed) | 1 | |
| 70 | 99272-000 | . CHANNEL - Condenser door frame (Used if air conditioning is installed) | 1 | |
| 71 | 99273-000 | . STIFFENER - Condenser door frame (Used if air conditioning is installed) | 1 | |
| 72 | 99278-003 | . ZEE ASSY - Condenser door frame (Used if air conditioning is installed) | 1 | |
| 73 | 99496-000 | . BRACKET ASSY - Condenser door actuation (Used if air conditioning is installed) | 1 | |
| 74 | 99561-000 | . . BEARING ASSY - Condenser door actuation (Used if air conditioning is installed) | 1 | |
| -75 | 99549-010 | . SKIN ASSY - lwr center (Used if air conditioning is installed) | 1 | |
| -76 | 76497-006 | PANEL ASSY - fairlead (Used if air conditioning is installed) | 1 | |
| 77 | 99552-002 | BRACKET ASSY - Condenser door bellcrank, left (Used if air conditioning is installed) | 1 | |
| -77A | 99552-000 | BRACKET ASSY - Condenser door bellcrank, right (Used if air conditioning is installed) | 1 | |
| 78 | 22482-000 | SCOOP - Evaporator vent (Used if air conditioning is installed) | 1 | |
| 79 | 99615-000 | COVER - Air conditioning exhaust louver, left (Used if air conditioning is installed) | 1 | |

-ITEM NOT ILLUSTRATED

When ordering, always specify Part Number, Description, and Serial Number of Aircraft



Island Enterprises

| Figure and Index Number | Part Number | Nomenclature | No. Req. | Serial Numbers Affected |
|---|---|---|---|---|
| 12- | | | | |
| -79A | 99615-001 | COVER - Air conditioning exhaust louver, right<br>(Used if air conditioning is installed) | 1 | |
| 80 | 99631-000 | FILTER - Air conditioning exhaust<br>(Used if air conditioning is installed) | 1 | |

-ITEM NOT ILLUSTRATED

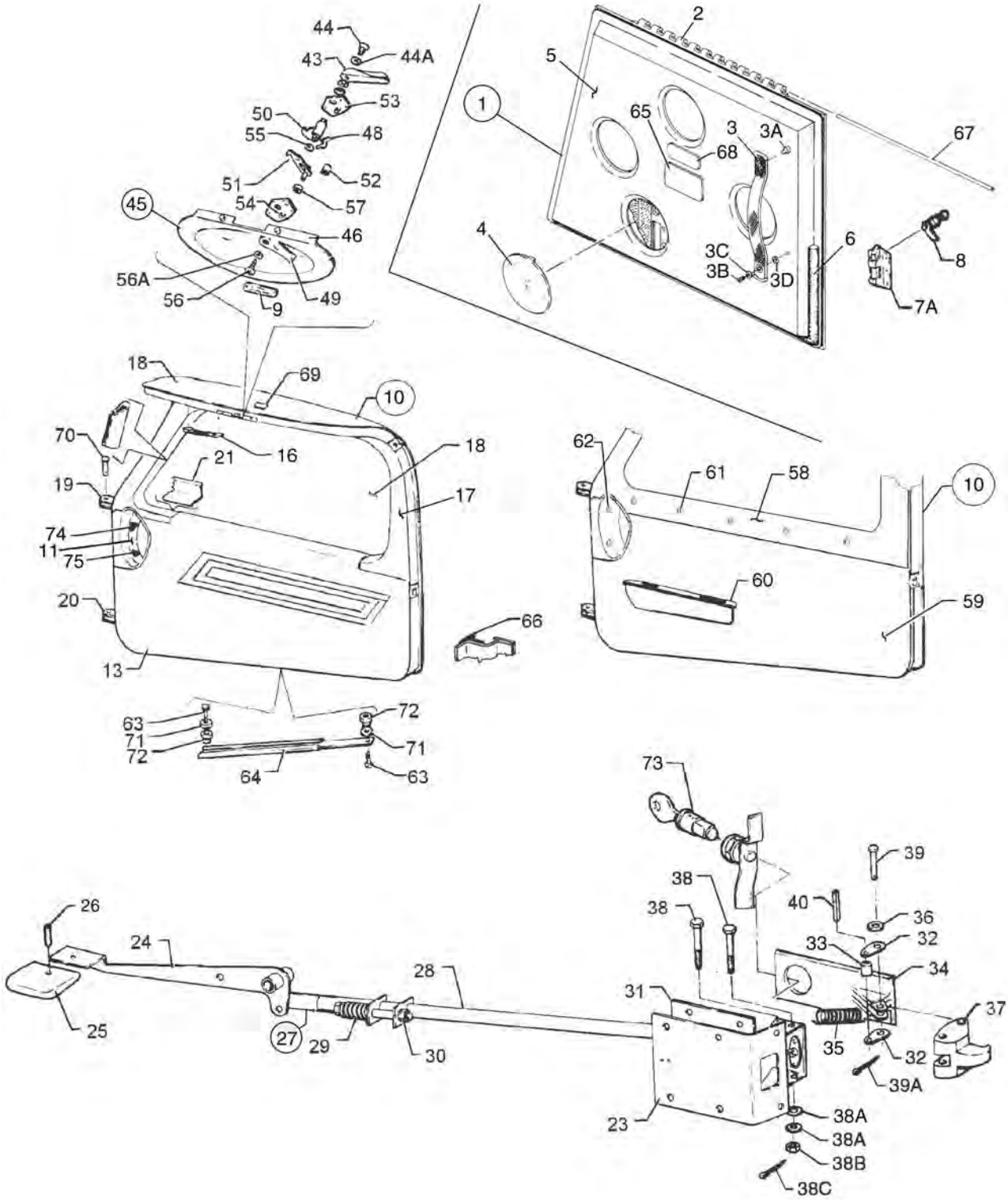


Figure 13. Fuselage Cabin and Baggage Door Installation

| Figure and Index Number | Part Number | Nomenclature | No. Req. | Serial Numbers Affected |
|---|---|---|---|---|
| 13- | 79546 (BF) | DRAWING - Doors Installation | | |
| | 36722 (L) | DRAWING - Door Snubber Installation | | |
| | 100856 (L) | DRAWING - Door Lock Kit | | |
| 1 | 66793-018 | DOOR ASSY - Baggage compartment (bonded) (Less lock assy) | 1 | |
| 2 | 62657-012 | . HINGE | 1 | |
| 3 | 83365-002 | . STRAP ASSY - Baggage door | 1 | |
| 3A | 687-541 | . STUD - (XX-16362) | 1 | |
| 3B | 415-539 | . SCREW - (MS35206-249) | 1 | |
| 3C | 690-612 | . WASHER - (NAS1149F0363P) | 1 | |
| 3D | 37511-026 | . SPACER | 1 | |
| -3E | 655-100 | . COVER - (APP0SC25001M) | 1 | |
| -3F | 452-104 | . BASE - (APP0SB250P) | 1 | |
| 4 | 79452-000 | . COVER - Lock access (5.75 dia.) | 1 | |
| 5 | 66793-019 | . SKIN ASSY - Inner baggage door | 1 | |
| 6 | 62657-016 | . DOOR SEAL - right | 1 | |
| -6A | 62657-013 | . DOOR SEAL - bottom | 1 | |
| -6B | 62657-014 | . DOOR SEAL - left | 1 | |
| -6C | 62657-015 | . DOOR SEAL - top | 1 | |
| 7 | 66793-003 | . SKIN ASSY - Outer baggage door | 1 | |
| 7A | 472-010 | . LATCH - Push button (H38) | 1 | |
| 8 | 100586-009 | LOCK ASSY - Baggage door (Part of kit 100586-002) | 1 | |
| 9 | 68555-005 | PLACARD - Door lock (See Figure 72) | RF | |
| 10 | 79545-015 | DOOR ASSY - Complete (less lock assy) (SEE NOTE 1) | 1 | |
| 10 | 79545-019 | DOOR ASSY - Complete, fwd cabin | 1 | 2843203 and up |
| 10 | 79545-020 | DOOR ASSY - Complete, fwd cabin | 1 | 2843203 and up |
| 10 | 79545-021 | DOOR ASSY - Complete, fwd cabin | 1 | 2843203 and up |
| 10 | 79545-022 | DOOR ASSY - Complete, fwd cabin | 1 | 2843203 and up |
| 11 | 84277-086 | . PAN - Door latch (When ordering, specify color) | 1 | |
| 13 | 84277-095 | . PANEL ASSY - Cabin door (When ordering, specify color and material) | 1 | 2843078 and up |
| 13 | 84277-014 | . PANEL ASSY - Cabin door (When ordering, specify color and material) | 1 | 2843001 thru 2843077 |
| 16 | 464-412 | . HANDLE - Door assist | 1 | |
| 17 | 79475-095 | . DOOR ASSY - Cabin (less window and lock assy) | 1 | |
| 18 | 79475-096 | . . WINDOW - Cabin door (.125 thick), tinted | 1 | |
| 19 | 79475-007 | . . HINGE - Cabin door, upper | 1 | |
| 20 | 79475-008 | . . HINGE - Cabin door, lower | 1 | |
| 21 | 79475-103 | . . RETAINER - Window | 1 | |
| 22 | 79515-002 | . . DOOR ASSY - Mech Instl, cabin | 1 | |
| -23 | 79515-073 | . . . COVER - Cabin door latch | 1 | |
| -24 | 79515-013 | . . . HANDLE - Cabin, clear | 1 | |
| -24A | 400-668 | . . . BOLT - (AN23-26) | 1 | |
| -24B | 690-609 | . . . WASHER - (NAS1149F0332P) | 4 | |
| -24C | 404-392 | . . . NUT - (AN320-3) | 1 | |
| -24D | 690-609 | . . . WASHER - (NAS1149F0332P) | 1 | |
| -25 | 79647-002 | . . . KNOB - Door handle | 1 | |
| -26 | 486-145 | . . . SCREW - Set (1/4-20 x 1/4'' L.) | 1 | |
| 27 | 79515-004 | . . . LATCH ASSY - Door | 1 | |
| 28 | 79515-006 | . . . . TUBE ASSY - Door latch | 1 | |
| 29 | 587-398 | . . . . . SPRING - Door latch tube | 1 | |

-ITEM NOT ILLUSTRATED

When ordering, always specify Part Number, Description, and Serial Number of Aircraft

| Figure and Index Number | Part Number | Nomenclature | No. Req. | Serial Numbers Affected |
|---|---|---|---|---|
| 13- | | | | |
| -29A | 65146-000 | . . . . . SPRING - Door latch tube | 1 | |
| 30 | 400-113 | . . . . . BOLT - (AN4-20) | 1 | |
| -30A | 690-611 | . . . . . WASHER - (NAS1149F0463P) | 3 | |
| -30B | 404-101 | . . . . . NUT - (AN310-4) | 1 | |
| -30C | 424-051 | . . . . . COTTER PIN - (MS24665-132) | 1 | |
| 31 | 79515-007 | . . . . BOX ASSY - Door latch | 1 | |
| 32 | 79515-008 | . . . . LINK - Door latch mechanism | 2 | |
| 33 | 79515-015 | . . . . BUSHING - Door latch mechanism | 1 | |
| 34 | 79530-002 | . . . . HANDLE - Door latch mechanism | 1 | |
| 35 | 587-381 | . . . . SPRING - (E0240-037-1750S) | 1 | |
| 36 | 62833-105 | . . . . WASHER - Door latch mechanism | 1 | |
| 37 | 79532-002 | . . . . LATCH - Cabin door | 1 | |
| 38 | 400-665 | . . . . BOLT - (AN21-31) | 2 | |
| 38A | 690-640 | . . . . WASHER - (NAS1149FN632P) | 2 | |
| 38B | 404-391 | . . . . NUT - (AN320-1) | 2 | |
| 38C | 424-041 | . . . . COTTER PIN - (MS24665-5) | 2 | |
| 39 | 424-178 | . . . . PIN - (MS20392-2C19) | 1 | |
| 39A | 424-041 | . . . . COTTER PIN - (MS24665-5) | 1 | |
| 40 | 480-800 | . . . . PIN - Spring (MS9048-111) | 1 | |
| 43 | 63039-000 | . . HANDLE - Door, auxiliary latch | 1 | |
| 44 | 520-056 | . . SCREW - (MS24622-43) | 1 | |
| 44A | 62833-107 | . . WASHER - Teflon | 1 | |
| -44B | 690-647 | . . WASHER - (NAS1149C0863R) | 1 | |
| 45 | 36598-002 | . . LATCH ASSY - Door, auxiliary | 1 | |
| 46 | 79475-034 | . . . PAN - Door latch, white | 1 | |
| 48 | 63045-000 | . . . SPRING - Door latch | 1 | |
| 49 | 63039-000 | . . . HANDLE - Door, auxiliary | 1 | |
| 50 | 63042-003 | . . . CAM - Door latch | 1 | |
| 51 | 63036-004 | . . . HOOK ASSY - Door latch (with 1/4 O. D. welded stud) | 1 | |
| 52 | 63900-050 | . . . BUSHING | 3 | |
| 53 | 68179-007 | . . . PLATE - Door latch (SEE NOTE 2) | 1 | |
| 54 | 68179-008 | . . . PLATE - Door latch (SEE NOTE 2) | 1 | |
| 55 | 690-647 | . . . WASHER - (NAS1149C0863R) | 1 | |
| 56 | 519-853 | . . . SCREW - (MS24622-43) | 1 | |
| 56A | 62833-107 | . . . WASHER - Teflon | 1 | |
| 57 | 36572-003 | . . . ROLLER - Door latch (3/8 O. D.) | 1 | |
| 58 | 84277-161 | . PANEL ASSY - Cabin door, upper (used with 79545-020 Door Assy) | 1 | |
| 58 | 84277-162 | . PANEL ASSY - Cabin door, upper (used with 79545-021 Door Assy) | 1 | |
| 58 | 84277-013 | . PANEL ASSY - Cabin door, upper (used with 79545-015 Door Assy) | 1 | |
| 58 | 84277-163 | . PANEL ASSY - Cabin door, upper (used with 79545-022 Door Assy) | 1 | |
| 58 | 84277-160 | . PANEL ASSY - Cabin door, upper (used with 79545-019 Door Assy) | 1 | |
| 59 | 84277-014 | . PANEL ASSY - Cabin door, lower | 1 | 2843001 thru 2843077 |
| 59 | 84277-095 | . PANEL ASSY - Cabin door, lower | 1 | 2843078 and up |
| 60 | 66710-007 | . ARMREST ASSY | 1 | 2843001 thru 2843077 |
| 60 | 66710-015 | . ARMREST ASSY | 1 | 2843001 thru 2843077 |
| 60 | 66710-043 | . ARMREST ASSY | 1 | 2843001 thru 2843077 |
| 60 | 89265-002 | . ARMREST ASSY | 1 | 2843078 and up |

-ITEM NOT ILLUSTRATED

When ordering, always specify Part Number, Description, and Serial Number of Aircraft



Island Enterprises

| Figure and Index Number | Part Number | Nomenclature | No. Req. | Serial Numbers Affected |
|---|---|---|---|---|
| 13- | | | | |
| 61 | 419-939 | . SCREW - (4x3/4 L) | 5 | |
| | | (Used with 79545-015 Door Assy) | | |
| 61 | 419-678 | . SCREW | 5 | |
| | | (Used with 79545-019 thru -022 Door Assy) | | |
| -61A | 581-928 | . PLUG - (207-200201-00-0103) | 5 | |
| 62 | 416-778 | . SCREW - (MS35191-270) | 2 | |
| | | (Used with 79545-015 Door Assy) | | |
| 62 | 410-100 | . SCREW - (MS24694S48) | 2 | |
| | | (Used with 79545-019 thru -022 Door Assy) | | |
| -62A | 494-002 | . WASHER | 2 | |
| 63 | 400-862 | BOLT - (AN23-10A) | 2 | |
| 64 | 65727-000 | DOOR HOLDER ASSY | 1 | |
| 65 | 69669-171 | PLACARD - Baggage compartment (See Figure 72) | RF | |
| 66 | 36722-004 | SEAL - Door snubber (150'' long) | 1 | |
| 67 | 62400-002 | PIN - Baggage door hinge | 1 | |
| 68 | 87341-005 | PLACARD - Max. baggage (See Figure 72) | RF | |
| 69 | 87334-002 | PLACARD - Door release (See Figure 72) | RF | |
| 70 | 424-204 | PIN - (MS20392-3C13) | 2 | |
| -70A | 690-613 | WASHER - (NAS1149F0432) | 6 | |
| -70B | 424-051 | COTTER PIN - (MS24665-132) | 2 | |
| 71 | 62833-039 | WASHER - Door holder (neoprene) | 2 | |
| 72 | 63020-002 | BUSHING - Door holder | 2 | |
| 73 | 100586-008 | LOCK ASSY - Cabin door | 1 | |
| 74 | 69669-117 | PLACARD - Open (See Figure 72) | RF | |
| 75 | 69669-118 | PLACARD - Latch (See Figure 72) | RF | |

NOTES:

1. COMPLETE DOOR ASSY NOT AVAILABLE. ORDER COMPONENT PARTS.

2. USED WITH DOOR LATCH HOOK ASSY THAT HAS A 1/4 O.D. WELDED STUD AND 3/8 O.D. REMOVABLE ROLLER.

-ITEM NOT ILLUSTRATED

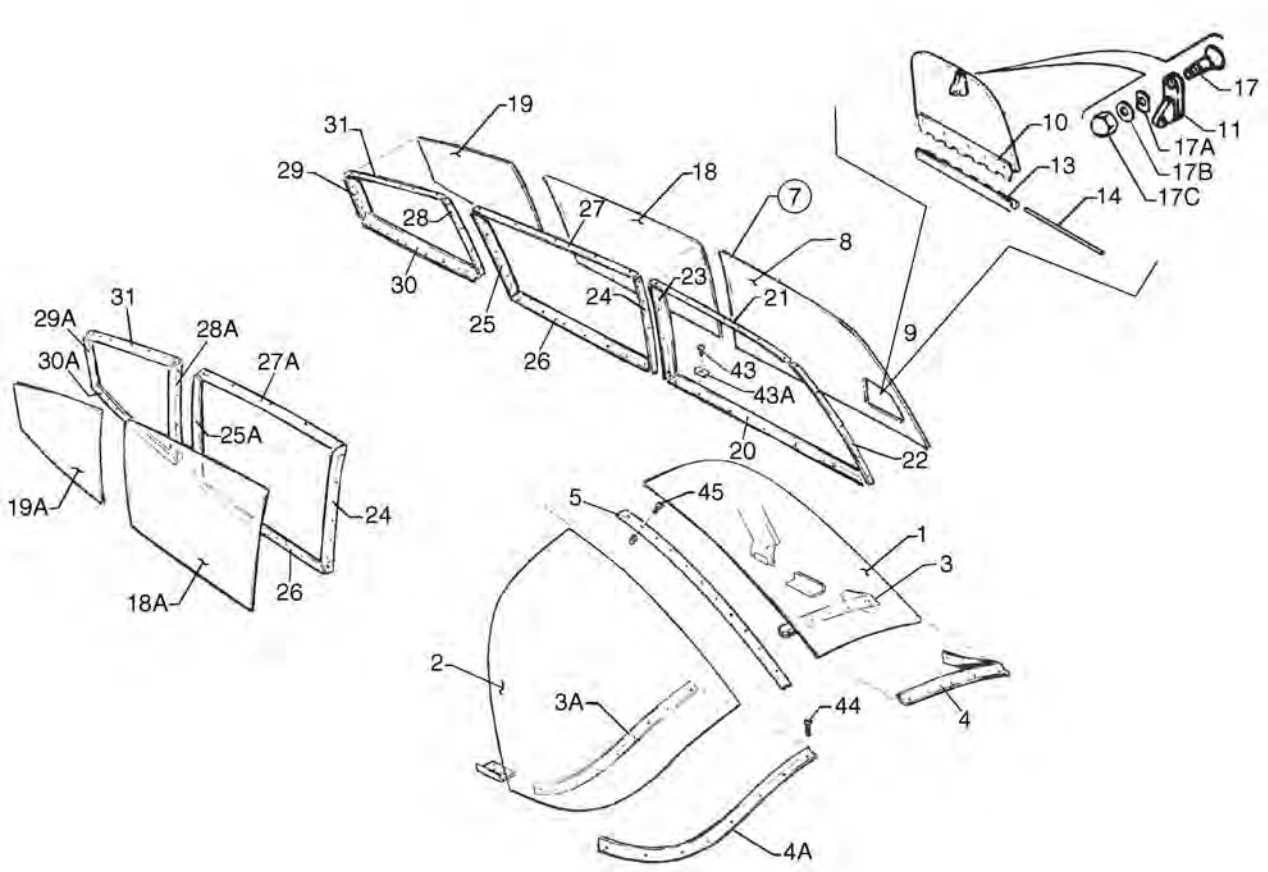


Figure 14. Fuselage Enclosure Installation

| Figure and Index Number | Part Number | Nomenclature | No. Req. | Serial Numbers Affected |
|---|---|---|---|---|
| 14- | 84290 (NEW) | DRAWING - Windshield Installation | | |
| | 85435 (A) | DRAWING - Window Installation | | |
| 1 | 84290-012 | WINDSHIELD - Left (.250 thick) | 1 | |
| 2 | 84290-013 | WINDSHIELD - Right (.250 thick) | 1 | |
| 3 | 63070-043 | COLLAR - Inside, left | 1 | |
| 3A | 63070-044 | COLLAR - Inside, right | 1 | |
| 4 | 84290-006 | COLLAR - Outside, left | 1 | |
| 4A | 84290-007 | COLLAR - Outside, right | 1 | |
| 5 | 79557-002 | TRIM STRIP - Windshield, center | 1 | |
| 7 | 65826-007 | WINDOW ASSY - Front, left | 1 | |
| 8 | 65798-005 | . WINDOW - Front, left | 1 | |
| 9 | 65896-002 | . WINDOW ASSY - Storm | 1 | |
| 10 | 65895-000 | . . HINGE - Half | 1 | |
| 10A | 65740-002 | . . WINDOW - Storm | 1 | |
| -10B | 189-757 | . . TAPE - TYPE 2 1/8 x 1/4 | 1 | |
| 11 | 65742-000 | . LATCH - Storm window | 1 | |
| 13 | 65782-000 | . HINGE - Half | 1 | |
| 14 | 63744-009 | . PIN - Hinge | 1 | |
| 17 | 79572-002 | . SCREW - Storm window attachment | 1 | |
| | | (Used if latch assy attachment screw is bonded to window assy) | | |
| 17A | 408-826 | . WASHER - Shakeproof (3502-10-71) | 1 | |
| | | (Used if latch assy attachment screw is bonded to window assy) | | |
| 17B | 407-041 | . .WASHER - (MS35338-41) | 1 | |
| | | (Used if latch assy attachment screw is bonded to window assy) | | |
| 17C | 477-696 | . NUT - Dome (8061-NP) | 1 | |
| | | (Used if latch assy attachment screw is bonded to window assy) | | |
| 18 | 85192-002 | WINDOW - Center, left (.125 thick) | 1 | |
| 18A | 85192-003 | WINDOW - Center, right (.125 thick) | 1 | |
| 19 | 85192-004 | WINDOW - Rear, left (.125 thick) | 1 | |
| 19A | 85192-005 | WINDOW - Rear, right (.125 thick) | 1 | |
| 20 | 85436-004 | RETAINER - Front window, bottom, left | 1 | |
| 21 | 76143-000 | RETAINER - Front window, top, left | 1 | |
| 22 | 79562-003 | RETAINER - Front window, front, left | 1 | |
| -23 | 76264-000 | RETAINER - Front window, rear, left | 1 | |
| -24 | 76264-000 | RETAINER - Center window, front, left and right | 2 | |
| -25 | 76267-000 | RETAINER - Center window, rear, left | 1 | |
| -25A | 76267-001 | RETAINER - Center window, rear, right | 1 | |
| -26 | 85436-002 | RETAINER - Center window, bottom, left and right | 2 | |
| 27 | 76265-000 | RETAINER - Center window, top, left | 1 | |
| 27A | 76266-000 | RETAINER - Center window, top, right | 1 | |
| 28 | 76270-000 | RETAINER - Rear window, front, left | 1 | |
| 28A | 76270-001 | RETAINER - Rear window, front, right | 1 | |
| 29 | 76272-002 | RETAINER - Rear window, rear, left | 1 | |
| 29A | 76272-003 | RETAINER - Rear window, rear, right | 1 | |
| 30 | 85436-008 | RETAINER - Rear window, bottom, left | 1 | |
| 30A | 85436-005 | RETAINER - Rear window, bottom, right | 1 | |
| 31 | 85436-007 | RETAINER - Rear window, top, left and right | 2 | |
| 43 | 419-584 | SCREW - (AN530-4R4) | 99 | |
| 43A | 83393-005 | BRACKET | 3 | |
| 44 | 486-286 | SCREW - (NAS601-8P) | 36 | |
| -44A | 406-823 | NUTPLATE - Anchor (NAS686A06K) | 24 | |
| 45 | 415-544 | SCREW - (MS35206-244) | 7 | |

-ITEM NOT ILLUSTRATED

When ordering, always specify Part Number, Description, and Serial Number of Aircraft

THIS PAGE INTENTIONALLY LEFT BLANK

# SECTION III
# TAIL SURFACES GROUP

Reissued: December 10, 2006



Island Enterprises

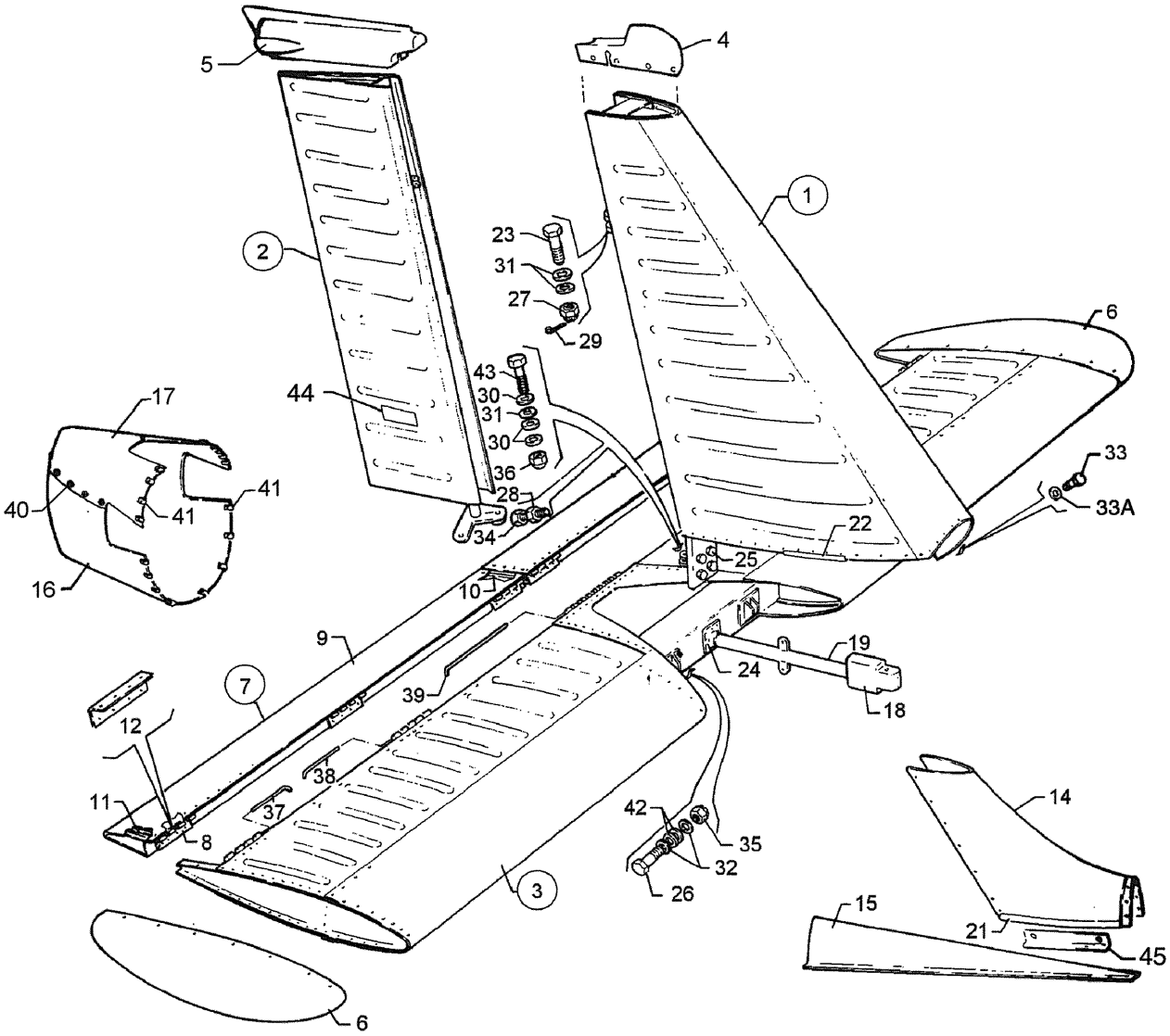


Figure 15. Tail Surfaces Installation

| Figure and Index Number | Part Number | Nomenclature | No. Req. | Serial Numbers Affected |
|---|---|---|---|---|
| 15- | 62002 (CW) | DRAWING - Tail Surfaces Installation | | |
| | 68425 (BN) | DRAWING - Tail Surfaces Installation - Complete | | |
| 1 | 66975-004 | FIN ASSY | 1 | |
| | | (See Figure 17 for component parts) | | |
| 2 | 65342-002 | RUDDER ASSY | 1 | |
| | | (See Figure 18 for component parts) | | |
| 3 | 68426-000 | STABILATOR ASSY | 1 | |
| | | (See Figure 16 for component parts | | |
| 4 | 38222-000 | TIP - Fin | 1 | 2843076 and up |
| 5 | 36706-002 | TIP ASSY - Rudder (without provisions for tail light) | 1 | |
| 6 | 63584-000 | TIP - Stabilator | 2 | |
| 7 | 63585-004 | TAB - Stabilator trim, right | 1 | |
| -7A | 63585-003 | TAB - Stabilator trim, left | 1 | |
| 8 | 63560-002 | . HINGE - Half, stabilator tab | 3 | |
| 9 | 63586-000 | . SKIN - Stabilator trim tab, L. H. | 1 | |
| -9A | 63586-001 | . SKIN - Stabilator trim tab, R. H. | 1 | |
| 10 | 63587-002 | . RIB - Inboard | 1 | |
| 11 | 63587-003 | . RIB - Outboard | 1 | |
| 12 | 63588-000 | . DOUBLER | 3 | |
| -13 | 401-330 | BOLT - (AN4-32A) | 1 | |
| 14 | 99619-007 | FAIRING - Fin, aft | 1 | |
| -14A | 410-054 | SCREW - (MS24694-C5) | 24 | |
| -14B | 598-395 | WASHER - (A31355S-017-24A) | 24 | |
| -14C | 477-672 | NUT | 24 | |
| 15 | 99621-002 | FAIRING - Fin, forward | 1 | |
| 16 | 66822-009 | FAIRING - Lower | 1 | |
| 17 | 66822-010 | FAIRING - Upper | 1 | |
| 18 | 99803-007 | BALANCE WEIGHT ASSY - Stabilator | 1 | |
| 19 | 69624-000 | . TUBE ASSY - Stabilator | 1 | |
| -19A | 401-332 | . BOLT - (AN4-34A) | 1 | |
| -19B | 690-611 | . WASHER - (NAS1149F0463P) | 2 | |
| -19C | 404-530 | . NUT - (MS21042-4) | 1 | |
| 21 | 63186-021 | MOULDING - Extruded | 2 | |
| 22 | 63186-002 | MOULDING - Extruded | 2 | |
| -23 | 400-056 | BOLT - (AN3-11) | 1 | |
| -24 | 400-450 | BOLT - (AN3-17A) | 2 | |
| | | (Refer to Piper Service Bulletin #1137 - latest revision) | | |
| -24A | 690-612 | WASHER - (NAS1149FN363P) | 6 | |
| -24B | 404-526 | NUT - (MS21042-3) | 2 | |
| -25 | 400-003 | BOLT - (AN4-6A) | 4 | |
| -25A | 690-611 | WASHER - (NAS1149F0463P) | 8 | |
| -25B | 404-888 | NUT - (MS20365-428C) | 4 | |
| -26 | 402-680 | BOLT - (NAS1104-17) | 2 | |
| 27 | 404-100 | NUT - Castle (AN310-3) | 1 | |
| 28 | 404-224 | NUT - (AN315-3R) | 2 | |
| 29 | 424-051 | COTTER PIN - (MS24665-132) | 1 | |
| 30 | 690-612 | WASHER - (NAS1149FN363P) | 10 | |
| 31 | 690-609 | WASHER - (NAS1149F0332P) | 3 | |
| 32 | 690-611 | WASHER - (NAS1149F0463P) | 4 | |
| 33 | 400-003 | BOLT - (AN4-6A) | 1 | |
| 33A | 690-611 | WASHER - (NAS1149F0463P) | 2 | |
| 34 | 553-266 | BOLT - (NKN428-3A7) | 2 | |
| 35 | 406-637 | NUT - (H10-4) | 2 | |
| 36 | 404-526 | NUT - (MS21042-3) | 1 | |

-ITEM NOT ILLUSTRATED

When ordering, always specify Part Number, Description, and Serial Number of Aircraft

| Figure and Index Number | Part Number | Nomenclature | No. Req. | Serial Numbers Affected |
|---|---|---|---|---|
| 15- | | | | |
| 37 | 62002-002 | PIN - Hinge | 2 | |
| 38 | 62002-003 | PIN - Hinge | 2 | |
| 39 | 62002-004 | PIN - Hinge | 1 | |
| 40 | 410-054 | SCREW - (MS24694-C5) | 10 | |
| -40A | 598-395 | WASHER - (A3135SS-017) | 10 | |
| -40B | 477-640 | CLIP NUT | 10 | |
| | | (Refer to Piper Service Bulletin #1141 - latest revision) | | |
| 41 | 415-378 | SCREW - (MS51957-45) | 16 | |
| -41A | 477-816 | CLIP NUT | 16 | |
| | | (Refer to Piper Service Bulletin #1141 - latest revision) | | |
| 42 | 690-613 | WASHER - (NAS1149F0432P) | AR | |
| 43 | 401-269 | BOLT - (AN3-10A) | 1 | |
| 44 | 87341-002 | PLACARD - Do not push (See Figure 72) | RF | |
| 45 | 101328-002 | ANGLE - Dorsal fin fitting, left | 1 | 2843076 and up |
| 45 | 79277-002 | ANGLE - Dorsal fin fitting, left | 1 | 2843001 thru 2843075 |
| -45A | 79277-003 | ANGLE - Dorsal fin fitting, right | 1 | 2843001 thru 2843075 |
| -45A | 101328-003 | ANGLE - Dorsal fin fitting, right | 1 | 2843076 and up |

-ITEM NOT ILLUSTRATED

THIS PAGE INTENTIONALLY LEFT BLANK

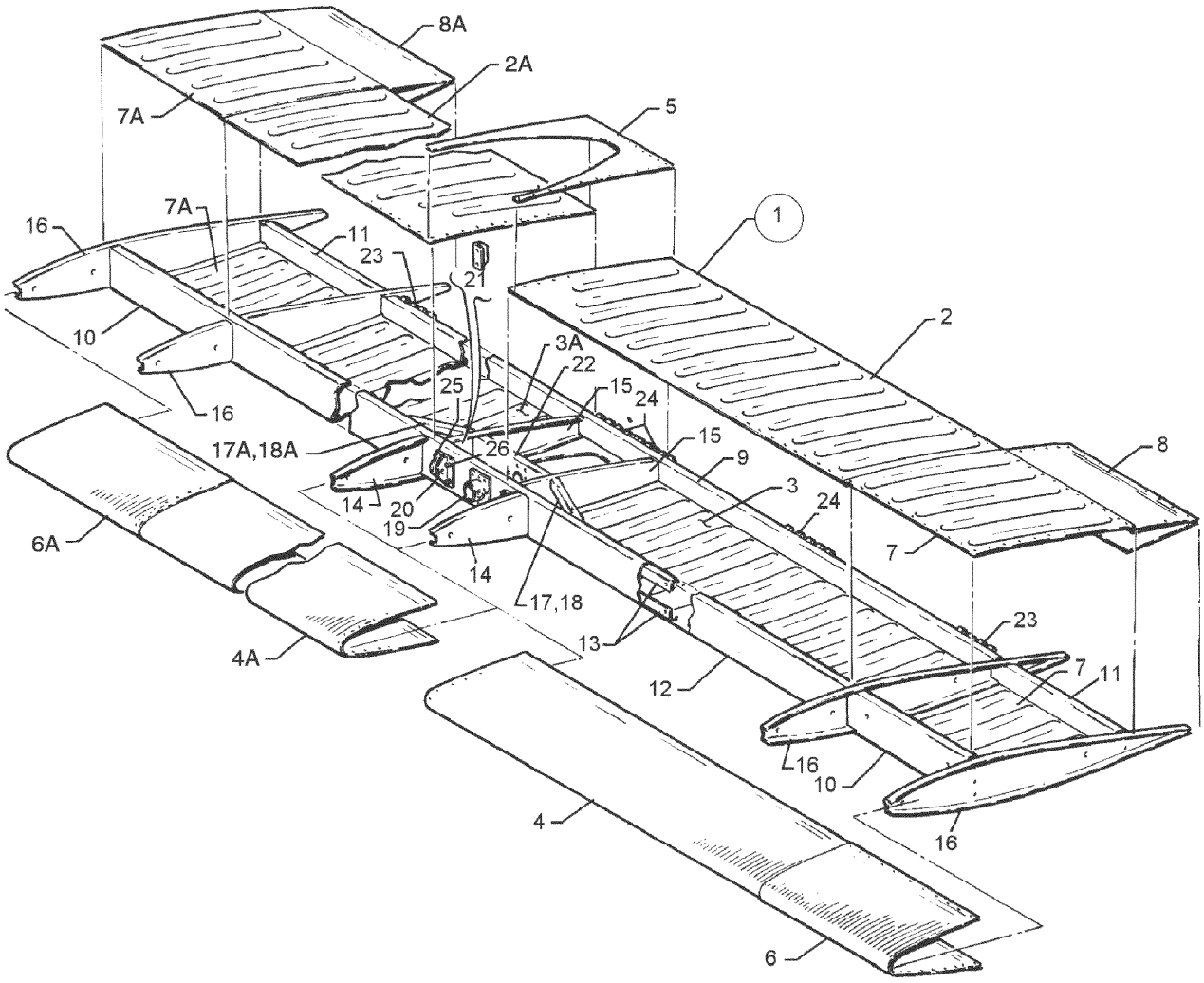


Figure 16. Stabilator Assembly

| Figure and Index Number | Part Number | Nomenclature | No. Req. | Serial Numbers Affected |
|---|---|---|---|---|
| 16- | 68425 (BN) | DRAWING - Tail Surfaces Installation | | |
| 1 | 68426-000 | STABILATOR ASSY | 1 | |
| 2 | 63392-000 | . SKIN - Stabilator, aft top, left | 1 | |
| 2A | 63392-001 | . SKIN - Stabilator, aft top, right | 1 | |
| 3 | 63393-000 | . SKIN - Stabilator, aft bottom, left | 1 | |
| 3A | 63393-001 | . SKIN - Stabilator, aft bottom, right | 1 | |
| 4 | 63573-000 | . SKIN - Stabilator, leading edge, left | 1 | |
| 4A | 63573-001 | . SKIN - Stabilator, leading edge, right | 1 | |
| 5 | 63575-000 | . SKIN - Stabilator, center, top | 1 | |
| -5A | 63575-002 | . SKIN - Stabilator, center, bottom | 1 | |
| 6 | 68429-000 | . SKIN - Stabilator, leading edge, left | 1 | |
| 6A | 68429-001 | . SKIN - Stabilator, leading edge, right | 1 | |
| 7 | 68430-000 | . SKIN - Stabilator, top and bottom left | 2 | |
| 7A | 68430-001 | . SKIN - Stabilator, top and bottom right | 2 | |
| 8 | 68431-000 | . SKIN - Stabilator, top, left, bottom, right | 2 | |
| 8A | 68431-001 | . SKIN - Stabilator, top, right, bottom, left | 2 | |
| 9 | 63572-000 | . SPAR - Stabilator, rear | 1 | |
| 10 | 68427-000 | . SPAR - Stabilator, outboard, forward | 2 | |
| 11 | 68428-000 | . SPAR - Stabilator, outboard, aft | 2 | |
| 12 | 63561-005 | . SPAR - Stabilator, main | 1 | |
| 13 | 63562-000 | . CAP - Stabilator, spar | 2 | |
| 14 | 63569-000 | . RIB - Stabilator, nose | 2 | |
| 15 | 63570-000 | . RIB - Stabilator, aft | 2 | |
| 16 | 63571-000 | . RIB - Stabilator, top | 4 | |
| 17 | 63566-003 | . STIFFENER - Stabilator, top, left | 1 | |
| 17A | 63566-002 | . STIFFENER - Stabilator, top, right | 1 | |
| 18 | 63566-002 | . STIFFENER - Stabilator, bottom, left | 1 | |
| 18A | 63566-003 | . STIFFENER - Stabilator, bottom, right | 1 | |
| 19 | 63567-000 | . FITTING - Balance weight attachment | 1 | |
| 20 | 63563-000 | . FITTING - Stabilator hinge | 2 | |
| 21 | 63564-000 | . ANGLE - Stabilator | 2 | |
| 22 | 63560-005 | . CLOSURE ASSY | 1 | |
| -23 | 63560-002 | . HINGE - Extruded, outboard | 2 | |
| -24 | 63560-003 | . HINGE - Extruded, inboard and center | 4 | |
| -25 | 400-003 | . BOLT - (AN4-6A) | 4 | |
| -25A | 690-611 | . WASHER - (NAS1149F0463P) | 8 | |
| -25B | 404-530 | . NUT - (MS21042-4) | 4 | |
| -26 | 400-004 | . BOLT - (AN4-7A) | 4 | |
| -26A | 690-611 | . WASHER - (NAS1149F0463P) | 8 | |
| -26B | 404-530 | . NUT - (MS21042-4) | 4 | |
| -27 | 63568-000 | . FILLER - Stabilator | 2 | |

-ITEM NOT ILLUSTRATED

When ordering, always specify Part Number, Description, and Serial Number of Aircraft

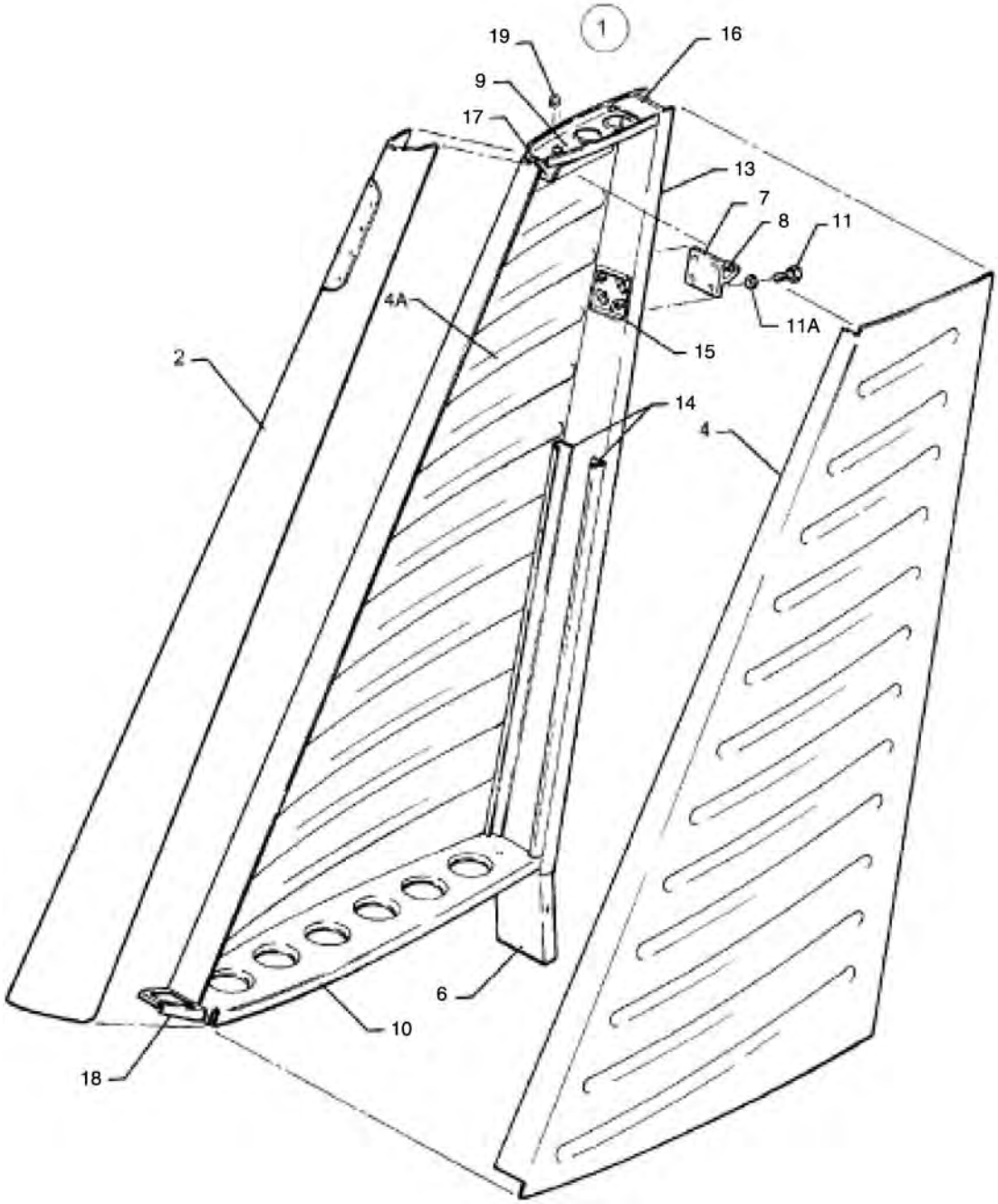


Figure 17. Fin Assembly

| Figure and Index Number | Part Number | Nomenclature | No. Req. | Serial Numbers Affected |
|---|---|---|---|---|
| 17- | 62002 (CW) | DRAWING - Tail Surfaces Installation | | |
| 1 | 66975-004 | FIN ASSY | 1 | |
| 2 | 63513-000 | . SKIN ASSY - Fin nose | 1 | |
| 3 | 63500-007 | . SKIN ASSY | 1 | |
| 4 | 63398-000 | . . SKIN - Fin, left | 1 | |
| -5 | 66975-002 | . SPAR FITTING ASSY | 1 | |
| 6 | 63501-003 | . . FITTING - Fin root | 1 | |
| 7 | 63502-000 | . . HINGE ASSY - Fin | 1 | |
| 8 | 452-387 | . . . BEARING | 1 | |
| 9 | 66972-000 | . . RIB ASSY - Fin, top | 1 | |
| 10 | 63506-000 | . . RIB ASSY - Fin, bottom | 1 | |
| 11 | 401-266 | . . BOLT - (AN3-5A) | 4 | |
| -12 | 63500-002 | . . SPAR ASSY | 1 | |
| 13 | 63504-000 | . . . SPAR - Fin rear | 1 | |
| 14 | 65034-000 | . . . STIFFENER - Fin spar, left | 1 | |
| 15 | 63509-000 | . . . DOUBLER ASSY - Fin | 1 | |
| 16 | 63515-000 | . BRACKET - Fin antenna | 1 | |
| 17 | 63510-000 | . CLIP - Fin | 1 | |
| 18 | 79268-000 | . RIB - Fin nose | 1 | |
| 19 | 477-672 | . NUT | 8 | |
| -20 | 581-760 | . PLATE | 1 | |

-ITEM NOT ILLUSTRATED

When ordering, always specify Part Number, Description, and Serial Number of Aircraft

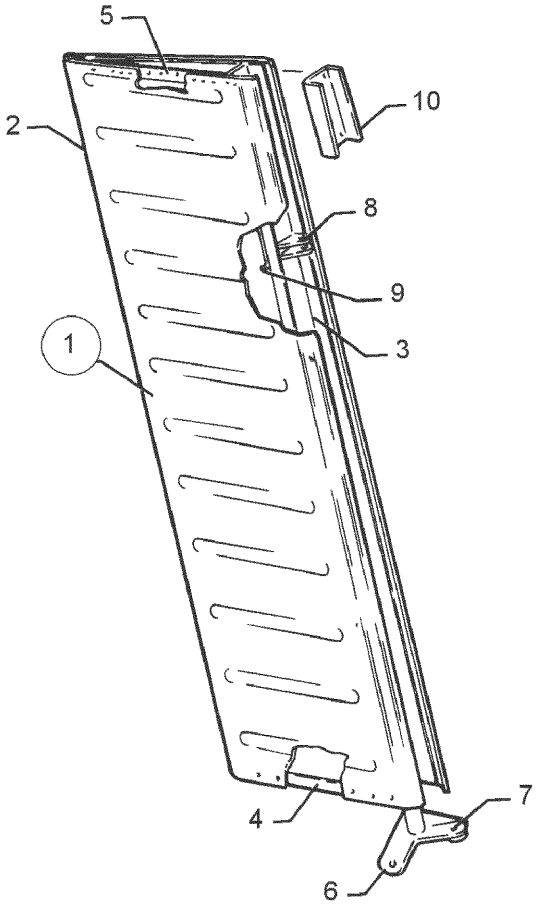


Figure 18. Rudder Assembly

| Figure and Index Number | Part Number | Nomenclature | No. Req. | Serial Numbers Affected |
|---|---|---|---|---|
| 18- | 62002 (CW) | DRAWING - Tail Surfaces Installation | | |
| 1 | 65342-002 | RUDDER ASSY | 1 | |
| 2 | 63396-002 | . SKIN - Rudder | 1 | |
| 3 | 63543-000 | . SPAR - Rudder | 1 | |
| 4 | 63544-000 | . RIB - Rudder root, bottom | 1 | |
| 5 | 63545-000 | . RIB - Rudder tip, top | 1 | |
| 6 | 63546-002 | . HORN ASSY - Rudder | 1 | |
| 7 | 452-387 | . . BEARING | 1 | |
| 8 | 63550-000 | . FITTING - Rudder hinge | 1 | |
| 9 | 63395-000 | . DOUBLER ASSY - Rudder hinge | 1 | |
| -9A | 400-438 | . BOLT - (AN3-4A) | 2 | |
| -9B | 690-609 | . WASHER - (NAS1149F0332P) | 2 | |
| 10 | 65341-000 | . DOUBLER - Rudder, top | 1 | |

-ITEM NOT ILLUSTRATED

When ordering, always specify Part Number, Description, and Serial Number of Aircraft

**GRIDS 1D6 THRU 1D8**
**INTENTIONALLY BLANK**

# SECTION IV
# LANDING GEAR GROUP

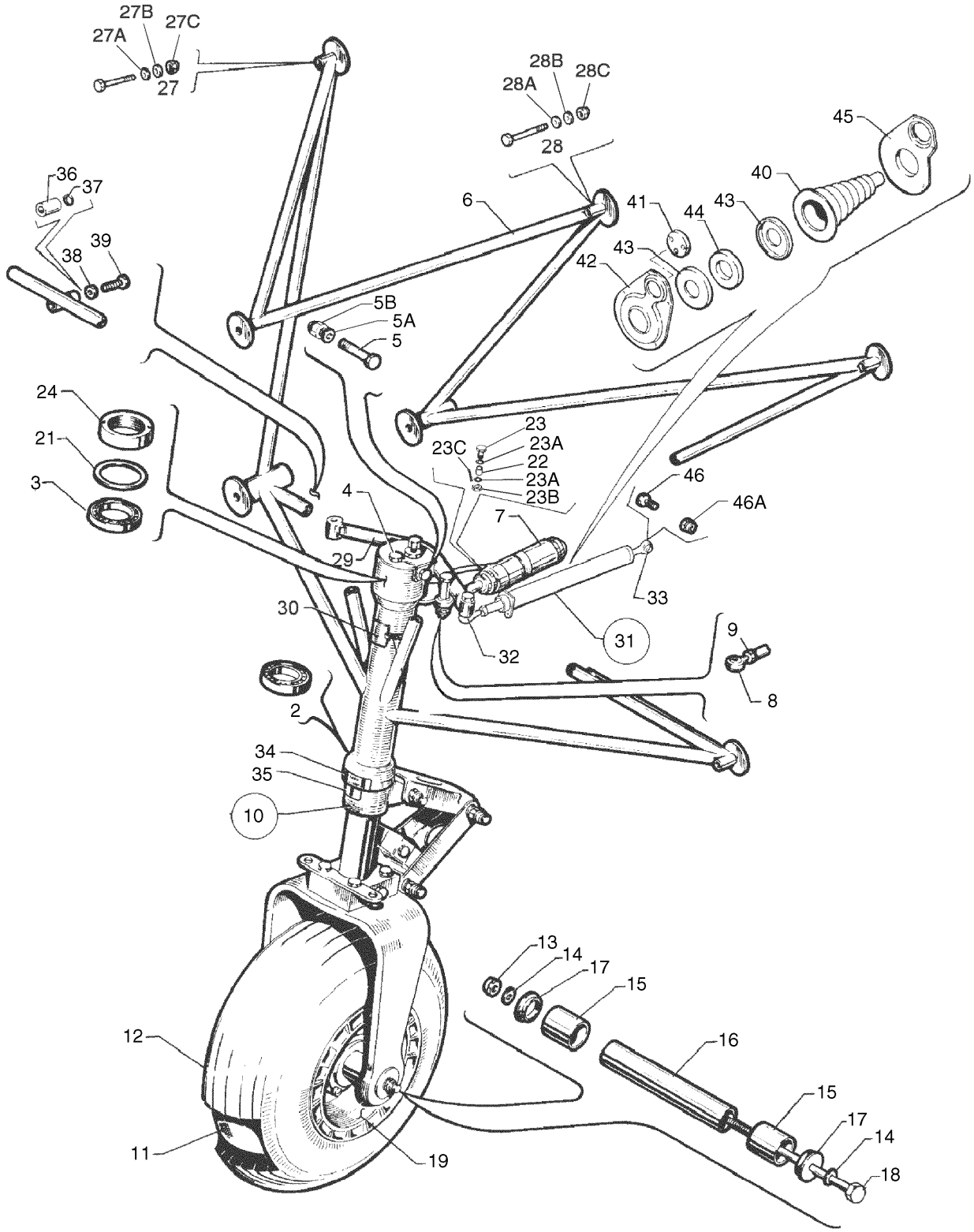


Figure 19. Nose Gear Installation

| Figure and Index Number | Part Number | Nomenclature | No. Req. | Serial Numbers Affected |
|---|---|---|---|---|
| 19- | 79108 (AC) | DRAWING - Nose Landing Gear Installation | | |
| -1 | 79108-008 | NOSE GEAR ASSY | 1 | |
| 2 | 452-332 | . BEARING - Main | 1 | |
| 3 | 15266-000 | . BEARING - Main | 1 | |
| 4 | 401-918 | . BOLT - (AN74A-3) | 1 | |
| -4A | 690-613 | . WASHER - (NAS1149F0432P) | AR | |
| | | (Install under horn when necessary) | | |
| 5 | 402-324 | . BOLT - (AN174-25A) | 1 | |
| 5A | 690-613 | . WASHER - (NAS1149F0432P) | 1 | |
| 5B | 404-530 | . NUT - (MS21042-4) | 1 | |
| 6 | 66662-015 | . MOUNT ASSY - Engine and nose gear strut | 1 | |
| 7 | 456-015 | . DAMPENER ASSY - Shimmy | 1 | |
| 8 | 452-334 | . BEARING - Rod end | 1 | |
| 9 | 404-225 | . NUT - (AN315-4R) | 1 | |
| -9A | 407-136 | . WASHER - (AN936-A416) | 1 | |
| 10 | 79110-002 | . STRUT ASSY - Nose wheel | 1 | |
| | | (See Figure 20 for remainder of component parts) | | |
| 11 | 451-735 | . . TUBE - Tire (6.00 x 6) | 1 | |
| 12 | 551-607 | . . TIRE - (6.00 x 6, 4 ply) B. F. Goodrich | 1 | |
| -12A | 451-720 | . . TIRE - (6.00 x 6, 4 ply) McCreary Airhawk (optional) | 1 | |
| 13 | 404-838 | . . NUT - (MS20364-624C) | 1 | |
| 14 | 690-629 | . . WASHER - (NAS1149F0663P) | 2 | |
| 15 | 66618-002 | . . TUBE - Spacer, nose wheel (on axle tube) | 2 | |
| | | (SEE NOTE 1) | | |
| -15A | 66618-003 | . . TUBE - Spacer, nose wheel (on axle tube) | 2 | |
| 16 | 86062-056 | . . TUBE - Axle, nose wheel | 1 | |
| 17 | 35158-002 | . . PLUG - Axle | 2 | |
| | | (Used on 551-785 only) | | |
| 18 | 401-456 | . . BOLT - Axle (AN6-76A) | 1 | |
| 19 | 551-785 | . . WHEEL ASSY - Nose, Cleveland | RF | |
| | | (See Figure 21 for component parts) | | |
| -19A | 551-779 | . . WHEEL ASSY - Nose, McCauley | RF | |
| | | (See Figure 22 for component parts) | | |
| -20 | 400-450 | . BOLT - (AN3-17A) | 1 | |
| -20A | 690-612 | . WASHER - (NAS1149FN363P) | 1 | |
| -20B | 404-526 | . NUT - (MS21042-3) | 2 | |
| 21 | 85012-072 | . WASHER | 1 | |
| 22 | 63900-041 | . BUSHING | 1 | |
| -23 | 400-058 | . BOLT - (AN3-13) | 1 | |
| -23A | 690-609 | . WASHER - (NAS1149F0332P) | AR | |
| -23B | 404-100 | . NUT - (AN310-3) | 1 | |
| -23C | 424-051 | . COTTER PIN - (MS24665-132) | 1 | |
| -24 | 13071-000 | . NUT | 1 | |
| 27 | 401-406 | BOLT - Mount attachment, side (AN6-26A) | 4 | |
| 27A | 690-629 | WASHER - Mount attachment, side (NAS1149F0663P) | AR | |
| 27B | 690-620 | WASHER - (NAS1149F0632P) | AR | |
| 27C | 404-563 | NUT - Mount attachment, side (MS21045-6) | 4 | |
| 28 | 401-416 | BOLT - Mount attachment, top center (AN6-36A) | 1 | |
| 28A | 690-629 | WASHER - Mount attachmnt, top ctr (NAS1149F0663P) | 1 | |
| 28B | 690-620 | WASHER - (NAS1149F0632P) | AR | |
| 28C | 404-563 | NUT - Mount attachment, top center (MS21045-6) | 1 | |
| 29 | 63300-014 | HORN ASSY - Nose wheel steering | 1 | |
| -29A | 400-448 | BOLT - (AN3-22A) | 2 | |
| -29B | 690-609 | WASHER - (NAS1149F0332P) | 2 | |

-ITEM NOT ILLUSTRATED

When ordering, always specify Part Number, Description, and Serial Number of Aircraft

| Figure and Index Number | Part Number | Nomenclature | No. Req. | Serial Numbers Affected |
|---|---|---|---|---|
| 19- | | | | |
| -29C | 404-526 | NUT - (MS21042-3) | 2 | |
| 30 | 580-881 | PLACARD - Oleo service instruction(decal) (63931-000) | 1 | 2843415 and up |
| 31 | 87468-002 | ROD ASSY - Nose wheel steering | 2 | |
| -31A | 408-045 | . WASHER - (MS35333-41) | 1 | |
| -31B | 404-323 | . NUT - (AN316-5R) | 1 | |
| 32 | 452-607 | . BEARING | 1 | |
| 33 | 452-341 | . BEARING | 1 | |
| -33A | 452-457 | . BEARING - (Optional) | 1 | |
| 34 | 683-019 | PLACARD - Turn limit (35669-010) (See Figure 72) | 1 | |
| 35 | 582-783 | PLACARD - Turn limit pointer (35669-005) (See Figure 72) | 1 | |
| 36 | 86700-048 | BUSHING - Nose gear stop | 2 | |
| 37 | 407-044 | WASHER - (MS35338-44) | 2 | |
| 38 | 405-580 | NUT - (1/4-20) | 2 | |
| 39 | 85061-002 | CAP SCREW (Used if longer bolt is required) | 2 | |
| 40 | 35270-000 | BOOT - Nose wheel bungee | 2 | |
| 41 | 63915-017 | DISC - Firewall seal | 2 | |
| 42 | 35284-002 | HOUSING - Bungee seal, left | 1 | |
| -42A | 35433-000 | HOUSING - Bungee seal, right | 1 | |
| 43 | 35283-000 | HOUSING - Bungee seal | 4 | |
| 44 | 35282-000 | RING - Bungee seal | 2 | |
| 45 | 35281-000 | PLATE - Bungee seal, left | 1 | |
| -45A | 35432-000 | PLATE - Bungee seal, right | 1 | |
| 46 | 400-440 | BOLT - (AN3-6A) | 2 | |
| 46A | 404-526 | NUT - (MS21042-3) | 2 | |

NOTES:

1. USED ON 551-779 ONLY. USED WITH CLEVELAND MODEL 40-76F AND McCauley MODEL D-30665 WHEEL ASSEMBLIES ONLY.

-ITEM NOT ILLUSTRATED

THIS PAGE INTENTIONALLY LEFT BLANK

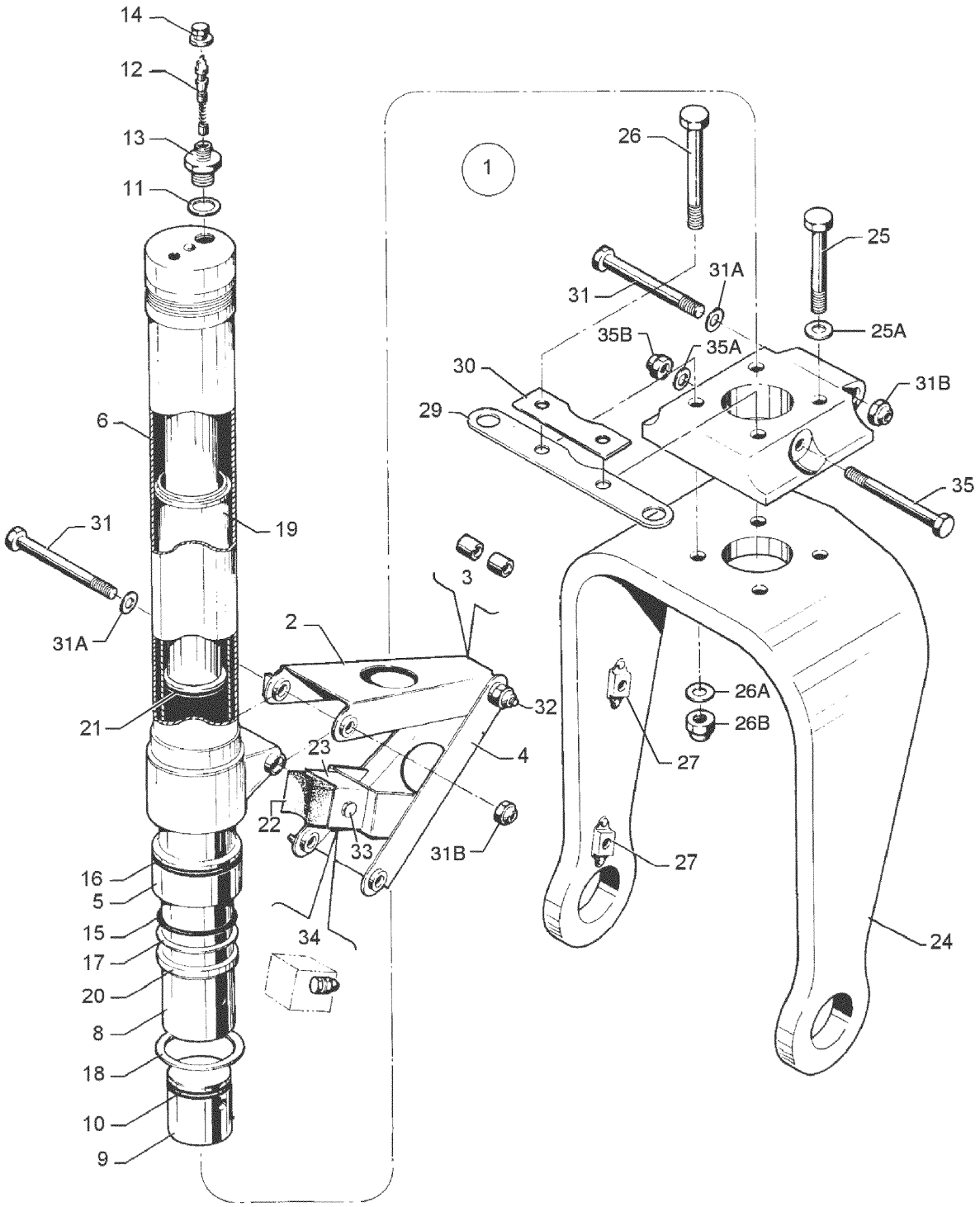


Figure 20. Nose Gear Strut Assembly

| Figure and Index Number | Part Number | Nomenclature | No. Req. | Serial Numbers Affected |
|---|---|---|---|---|
| 20- | 79108 (AC) | DRAWING - Nose Landing Gear Installation | | |
| 1 | 79110-002 | STRUT ASSY - Nose wheel | 1 | |
| 2 | 13074-002 | . LINK ASSY - Nose wheel, upper | 1 | |
| 3 | 452-766 | . . BEARING - (P32-4) | 2 | |
| 4 | 63383-000 | . LINK ASSY - Nose wheel, lower | 1 | |
| 5 | 66843-002 | . BEARING - Sleeve | 1 | |
| 6 | 65007-004 | . TUBE ASSY - Outer, upper (SEE NOTE 1) | 1 | |
| 8 | 65280-000 | . TUBE - Inner, lower (SEE NOTE 2) | 1 | |
| -9 | 15206-002 | . PLUG - Nose wheel oleo piston tube | 1 | |
| 10 | 15207-000 | . O-RING (484-733) | 1 | |
| 11 | 462-024 | . GASKET - Air valve (AN901-5A) | 1 | |
| 12 | 455-124 | . CORE - Air valve (AN809-1) | 1 | |
| 13 | 453-124 | . VALVE - Air valve (AN812-1-03) | 1 | |
| 14 | 553-891 | . CAP - Air valve (MS20813-1) | 1 | |
| 15 | 485-315 | . PACKING - Quad ring (4222) | 1 | |
| 16 | 462-050 | . PACKING - O-Ring (AN6230-2) | 1 | |
| 17 | 494-025 | . WASHER - Back-up (AN6246-27) | 1 | |
| 18 | 484-705 | . SNAP RING (5000-200) | 1 | |
| 19 | 484-720 | . RING - Retaining (3478) | 1 | |
| 20 | 187-625 | . STRIP - Wiper 5 1/4'' L. (10V70) | 1 | |
| 21 | 484-683 | . RING - Piston (R19046) | 1 | |
| 22 | 79072-000 | . BLOCK - Nose wheel bumper | 1 | |
| -23 | 79071-000 | . BRACKET ASSY - Nose wheel bumper block | 1 | |
| -24 | 79110-003 | . FORK ASSY - Nose wheel (with block assy) | 1 | |
| -25 | 401-195 | . . BOLT - (AN5-17A) | 2 | |
| -25A | 690-619 | . . WASHER - (NAS1149F0532P) | 4 | |
| -25B | 404-531 | . . NUT - (MS21042-5) | 2 | |
| -26 | 401-361 | . . BOLT - (AN5-22A) | 2 | |
| -26A | 690-619 | . . WASHER - (NAS1149F0532P) | 2 | |
| -26B | 404-531 | . . NUT - (MS21042-5) | 2 | |
| 27 | 506-550 | . . NUT - Anchor (MS21059L4) | 4 | |
| 29 | 65276-002 | . . LINK - Tow bar | 1 | |
| 30 | 65432-000 | . . SPACER - Tow bar link | 1 | |
| -30A | 65887-000 | . . BLOCK ASSY | 1 | |
| 31 | 691-314 | . BOLT - (NAS6605-44) | 2 | |
| 31A | 690-628 | . WASHER - (NAS1149F0563P) | 2 | |
| 31B | 404-531 | . NUT - (MS21042-5) | 2 | |
| 32 | 401-359 | . BOLT - (AN5-20A) | 1 | |
| -32A | 690-628 | . WASHER - (NAS1149F0563P) | 1 | |
| -32B | 404-531 | . NUT - (MS21042-5) | 1 | |
| 33 | 401-273 | . BOLT - (AN3-14A) | 1 | |
| -33A | 690-612 | . WASHER - (NAS1149FN363P) | 2 | |
| -33B | 404-526 | . NUT - (MS21042-3) | 1 | |
| 34 | 400-438 | . BOLT - (AN3-4A) | 1 | |
| -34A | 690-612 | . WASHER - (NAS1149FN363P) | 1 | |
| -34B | 404-526 | . NUT - (MS21042-3) | 1 | |
| 35 | 401-330 | . BOLT - (AN4-32A) | 1 | |
| 35A | 690-611 | . WASHER - (NAS1149F0463P) | 2 | |
| 35B | 404-530 | . NUT - (MS21042-4) | 1 | |

-ITEM NOT ILLUSTRATED

When ordering, always specify Part Number, Description, and Serial Number of Aircraft

| Figure and Index Number | Part Number | Nomenclature | No. Req. | Serial Numbers Affected |
|---|---|---|---|---|
| 20- | | | | |

NOTES:

1. BEFORE ORDERING TUBE ASSY, ASCERTAIN IF THE TOP OF THE SLEEVE BEARING (ITEM 5) INCORPORATES A 0.20 INCH LONG BY 0.028 INCH DEEP CHAMFER IN THE OUTER DIAMETER. IF THE CHAMFER DOES NOT EXIST, ALSO ORDER A NEW SLEEVE BEARING (66843-002).

2. IF EXISTING TUBE INCORPORATES A WELDED PLUG, IT WILL BE NECESSARY TO ORDER ONE EACH OF PLUG 15206-000 AND O-RING 484-733 IN ADDITION TO TUBE 65280-000.

-ITEM NOT ILLUSTRATED

THIS PAGE INTENTIONALLY LEFT BLANK

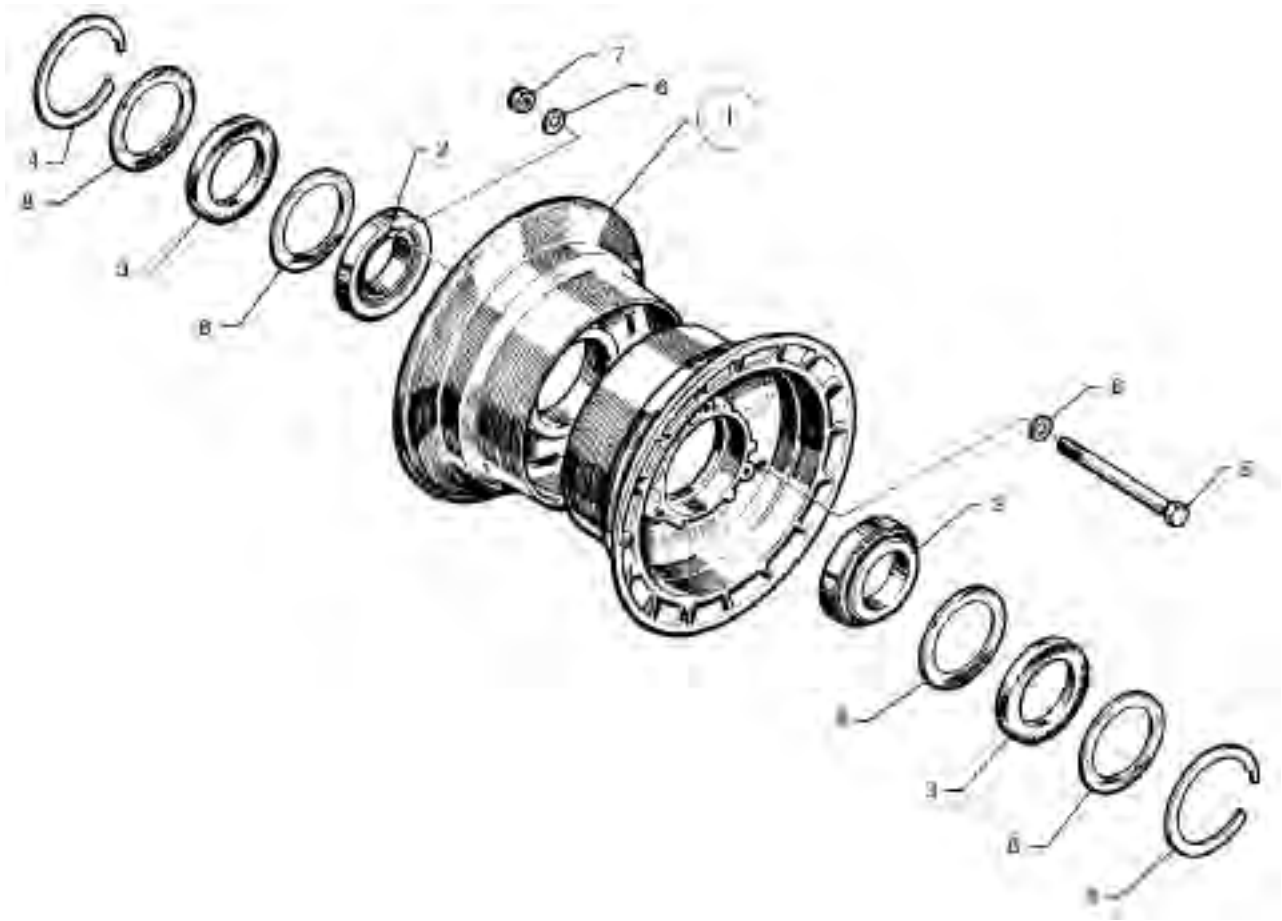

Figure 21. Nose Wheel Assembly (Cleveland)

| Figure and Index Number | Part Number | Nomenclature | No. Req. | Serial Numbers Affected |
|---|---|---|---|---|
| 21- | 79110 (AJ) | DRAWING - Strut Assy-Nose Wheel Oleo | | |
| 1 | 551-785 | WHEEL ASSY - Nose (Cleveland 40-56B) | 1 | |
| 2 | 753-448 | . BEARING - Cone (214-01400) | 2 | |
| 3 | 751-819 | . FELT - Grease seal (154-01400) | 2 | |
| 4 | 752-830 | . RING - Snap (155-00100) | 2 | |
| 5 | 758-456 | . BOLT - Wheel (AN5-34A) | 3 | |
| 6 | 690-628 | . WASHER - Wheel bolt (NAS1149F0563P) | 6 | |
| 7 | 404-531 | . NUT - Wheel bolt (MS21042-5) | 3 | |
| 8 | 755-964 | . RING - Grease seal (153-9) | 4 | |

-ITEM NOT ILLUSTRATED

When ordering, always specify Part Number, Description, and Serial Number of Aircraft

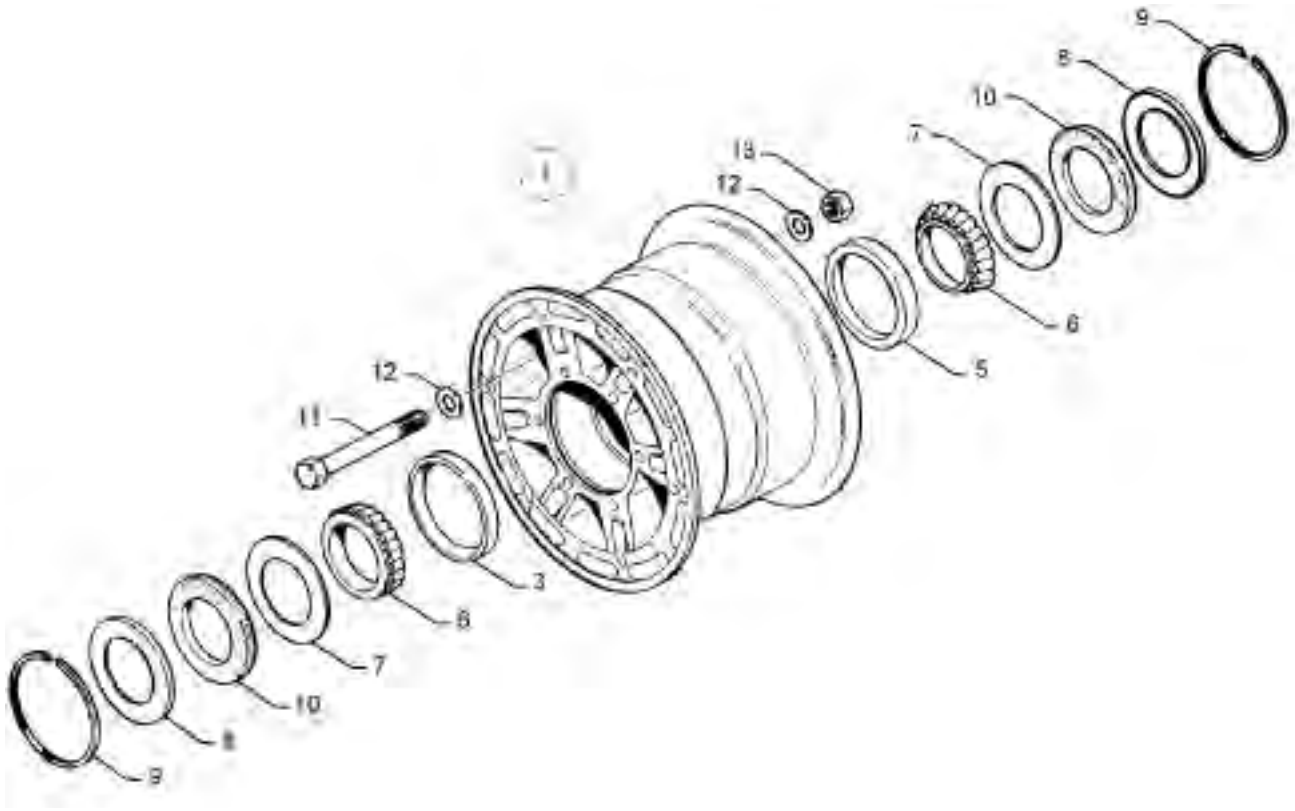


Figure 22. Nose Wheel Assembly (McCauley)

| Figure and Index Number | Part Number | Nomenclature | No. Req. | Serial Numbers Affected |
|---|---|---|---|---|
| 22- | 79110 (AJ) | DRAWING - Strut Assy-Nose Wheel Oleo | | |
| 1 | 551-779 | WHEEL ASSY - Nose (D-30665) | 1 | |
| 3 | 763-287 | . CUP - Bearing | 1 | |
| 5 | 763-287 | . CUP - Bearing | 1 | |
| 6 | 758-392 | . BEARING - Cone (A-30079-2) | 2 | |
| 7 | 762-559 | . RETAINER (153-30015) | 2 | |
| 8 | 762-558 | . RETAINER (A-30014) | 2 | |
| 9 | 762-562 | . RING - Retaining (155-11900) | 2 | |
| 10 | 754-855 | . FELT - Retainer (154-30010) | 2 | |
| 11 | 758-394 | . BOLT - (103-259) | 3 | |
| 12 | 756-685 | . WASHER - (095-10500) | 6 | |
| 13 | 752-571 | . NUT - (094-15100) | 3 | |

-ITEM NOT ILLUSTRATED

When ordering, always specify Part Number, Description, and Serial Number of Aircraft

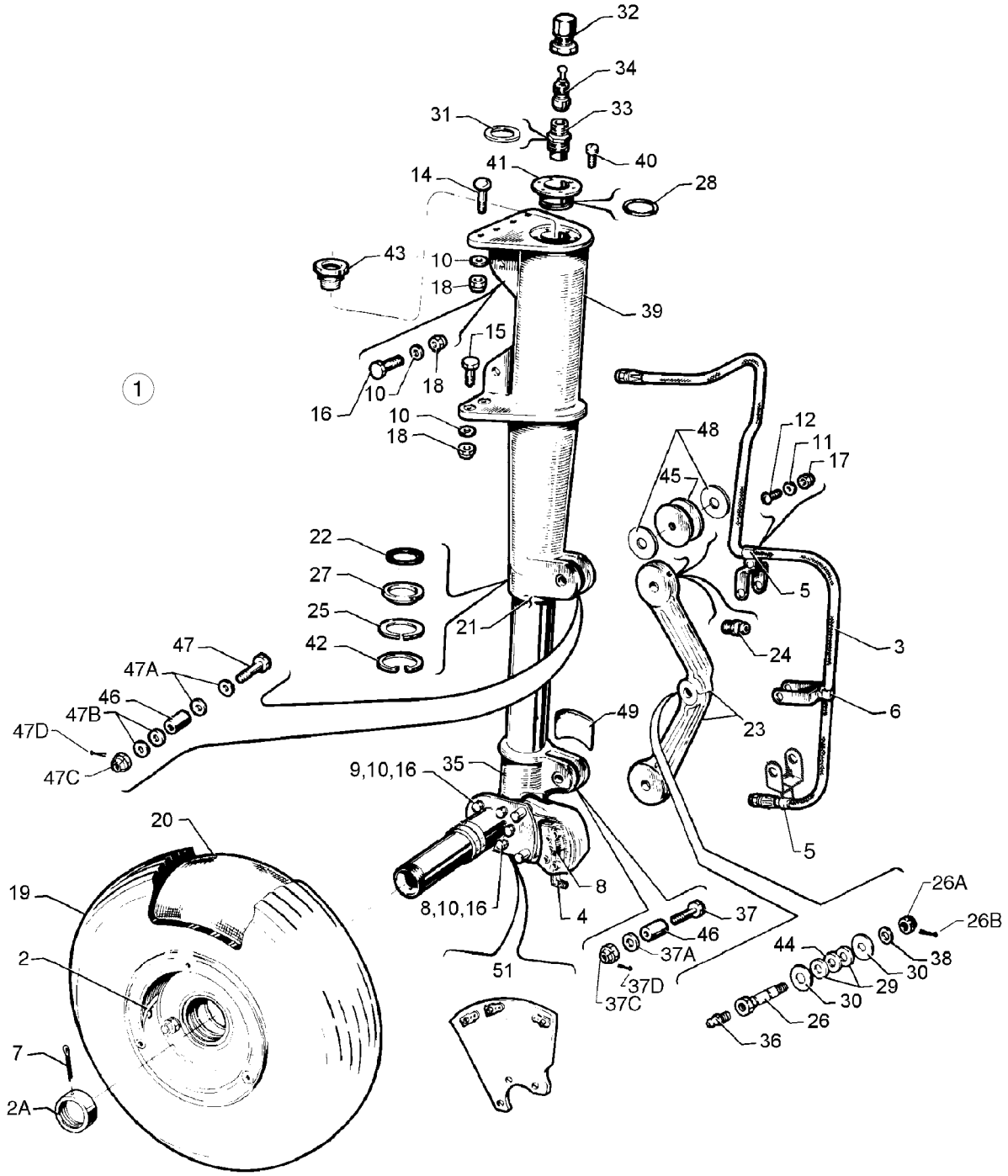


Figure 23. Main Gear Installation

| Figure and Index Number | Part Number | Nomenclature | No. Req. | Serial Numbers Affected |
|---|---|---|---|---|
| 23 | 62211 (W) | DRAWING - Main Gear Installation | | |
| | 65492 (AI) | DRAWING - Main Gear Assy | | |
| 1 | 65492-006 | MAIN GEAR ASSY - L/H (without tire) | RF | |
| -1A | 65492-007 | MAIN GEAR ASSY - R/H (without tire) | RF | |
| 2 | 551-764 | . WHEEL ASSY - (6.00 x 6) | RF | |
| | | (See Figure 24 for component parts) | | |
| 2A | 66820-000 | . NUT - Wheel retainer | 1 | |
| 3 | 63901-017 | . HOSE - Brake line | 2 | |
| -3A | 63901-060 | . HOSE - Brake line (optional) | 1 | |
| 4 | 458-894 | . ELBOW | 2 | |
| 5 | 63332-003 | . CLIP - Hose | 2 | |
| 6 | 63332-006 | . CLIP - Hose | 2 | |
| 7 | 424-071 | . COTTER PIN - (MS24665-360) | 2 | |
| 8 | 551-711 | . BRAKE ASSY | RF | |
| | | (See Figure 25 for component parts) | | |
| 9 | 404-530 | . NUT - (MS21042-4) | 6 | |
| 10 | 690-611 | . WASHER - (NAS1149F0463P) | AR | |
| 11 | 690-640 | . WASHER - (NAS1149FN632P) | 6 | |
| 12 | 415-518 | . SCREW - (MS35206-228) | 3 | |
| -13 | DELETED | | | |
| 14 | 416-346 | . SCREW - (AN525-416-20) | 8 | |
| 15 | 401-311 | . BOLT - (AN4-11A) | 8 | |
| 16 | 400-003 | . BOLT - (AN4-6A) | 16 | |
| 17 | 404-528 | . NUT - (MS21042-06) | 3 | |
| 18 | 404-530 | . NUT - (MS21042-4) | 32 | |
| 19 | 551-607 | . TIRE - (6.00 x 6, 4 PLY) Michelin air | 2 | |
| 19 | 551-608 | . TIRE - (6.00 x 6, 6 PLY) Michelin air (Optional) | 2 | |
| 19 | 551-655 | . TIRE / TUBE ASSY | 2 | |
| 20 | 451-735 | . TUBE - (6.00 x 6) | 2 | |
| 21 | 35644-004 | GEAR ASSY - Main, left | 1 | |
| | | (less tire, tube, wheel and brake assy) | | |
| -21A | 35644-005 | GEAR ASSY - Main, right | 1 | |
| | | (less tire, tube, wheel and brake assy) | | |
| 22 | 484-769 | . PACKING - Quad ring (4326) | 1 | |
| -23 | 78033-000 | . LINK ASSY - Torque | 2 | |
| -24 | 460-691 | . . FITTING - Lubricator (AN944-101) | 1 | |
| -25 | 63307-000 | . RING - Piston spacer | 1 | |
| -26 | 400-302 | . BOLT - Main gear torque link - (AN8-21) | 1 | |
| 26A | 404-105 | . NUT - (AN310-8) | 1 | |
| 26B | 424-059 | . COTTER PIN - (MS24665-283) | 1 | |
| 27 | 486-188 | . RING - Scraper (AN6231-18) | 1 | |
| 28 | 484-792 | . PACKING - O-Ring (MS28775-218) | 1 | |
| 29 | 63312-000 | . WASHER - Torque link spacer (1/8`` thickness) | 2 | |
| 30 | 62833-027 | . WASHER - Torque link bolt | 2 | |
| 31 | 462-024 | . GASKET - Air valve - (AN901-5A) | 1 | |
| 32 | 454-053 | . CAP - Air valve - (AN813-1B) | 1 | |
| 33 | 453-124 | . VALVE - Air - (AN812-1) | 1 | |
| 34 | 455-124 | . CORE - Air valve - (AN809-1) | 1 | |
| 35 | 78738-002 | . STUB AXLE AND OLEO PISTON ASSY - Left | 1 | |
| -35A | 78738-003 | . STUB AXLE AND OLEO PISTON ASSY - Right | 1 | |
| 36 | 460-691 | . FITTING - Lubricator - (AN944-101) | 1 | |
| 37 | 400-165 | . BOLT - (AN5-22) | 1 | |
| 37A | 690-628 | . WASHER - (NAS1149F0563P) | 3 | |
| -37B | 690-619 | . WASHER - (NAS1149F0532P) | 3 | |

-ITEM NOT ILLUSTRATED

When ordering, always specify Part Number, Description, and Serial Number of Aircraft

| Figure and Index Number | Part Number | Nomenclature | No. Req. | Serial Numbers Affected |
|---|---|---|---|---|
| 23- | | | | |
| 37C | 404-122 | . NUT - (AN310-C5) | 1 | |
| 37D | 424-095 | . COTTER PIN - (MS24665-151) | 1 | |
| 38 | 690-627 | . WASHER - (NAS1149F0832P) | AR | |
| 39 | 65319-004 | . CYLINDER | 1 | |
| -39A | 65319-002 | . CYLINDER - (Optional) | 1 | |
| 40 | 401-918 | . BOLT - (AN74-A3) | 6 | |
| 41 | 63315-000 | . CYLINDER HEAD | 1 | |
| 42 | 63314-000 | . RETAINING RING - Piston | 1 | |
| 43 | 65430-003 | . ORIFICE ASSY | 1 | |
| 44 | 63312-002 | . WASHER - Torque link spacer | 1 | |
| 45 | 63311-000 | . WASHER - Bearing (0.063 thick) | 4 | |
| 46 | 63310-000 | . SPACER - Torque link | 2 | |
| 47 | 400-166 | . BOLT - (AN5-23) | 1 | |
| 47A | 690-628 | . WASHER - (NAS1149F0563P)(minimum of 4 req.) | AR | |
| 47B | 690-619 | . WASHER - (NAS1149F0532P) | AR | |
| 47C | 404-122 | . NUT - (AN310-C5) | 1 | |
| 47D | 424-095 | . COTTER PIN - (MS24665-151) | 1 | |
| 48 | 63311-003 | . WASHER - Bearing (0.005 thick) | AR | |
| 49 | 63933-000 | PLACARD - Oleo service instruction (decal) | RF | |
| -50 | DELETED | | | |
| 51 | 37880-002 | BRACKET ASSY - Wheel fairing, left | RF | |
| -51A | 37880-003 | BRACKET ASSY - Wheel fairing, right | RF | |

-ITEM NOT ILLUSTRATED

When ordering, always specify Part Number, Description, and Serial Number of Aircraft

THIS PAGE INTENTIONALLY LEFT BLANK

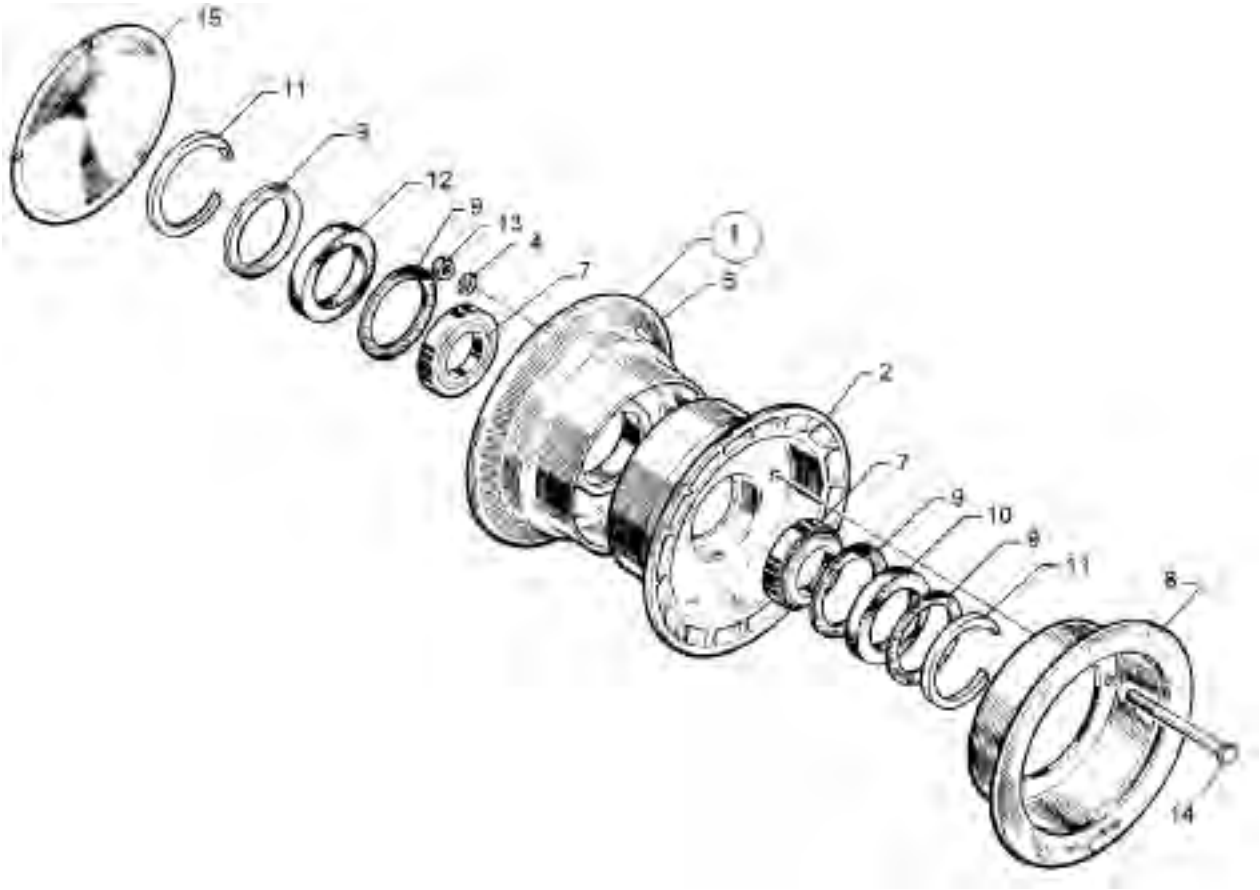


Figure 24. Main Wheel Assembly

| Figure and Index Number | Part Number | Nomenclature | No. Req. | Serial Numbers Affected |
|---|---|---|---|---|
| 24- | 83710 (B) | DRAWING - Wheel Cover | | |
| | 65492 (AI) | DRAWING - Main Gear Assy | | |
| 1 | 551-764 | WHEEL ASSY - Main (40-86B) | 2 | |
| 2 | 756-666 | . WHEEL HALF ASSY - Inner (161-04700) | 1 | |
| 4 | 690-628 | . WASHER - Wheel bolt (NAS1149F0563P) | 3 | |
| 5 | 576-665 | . WHEEL HALF ASSY - Outer | 1 | |
| 7 | 751-489 | . BEARING - Cone, timken (214-00200) | 2 | |
| 8 | 754-535 | . DISC ASSY - Brake (164-02000) | 1 | |
| 9 | 755-999 | . RING - Grease seal (153-4) | 4 | |
| 10 | 751-772 | . FELT - Grease seal (154-3) | 1 | |
| 11 | 752-830 | . RING - Snap (155-00100) | 2 | |
| 12 | 751-772 | . FELT - Grease seal (154-3) | 1 | |
| 13 | 404-531 | . NUT - Wheel bolt (MS21042-5) | 3 | |
| 14 | 751-405 | . BOLT - Wheel (AN5-35A) | 3 | |
| 15 | 451-783 | . SHIELD - Dust (83710-002) | 2 | |

-ITEM NOT ILLUSTRATED

When ordering, always specify Part Number, Description, and Serial Number of Aircraft

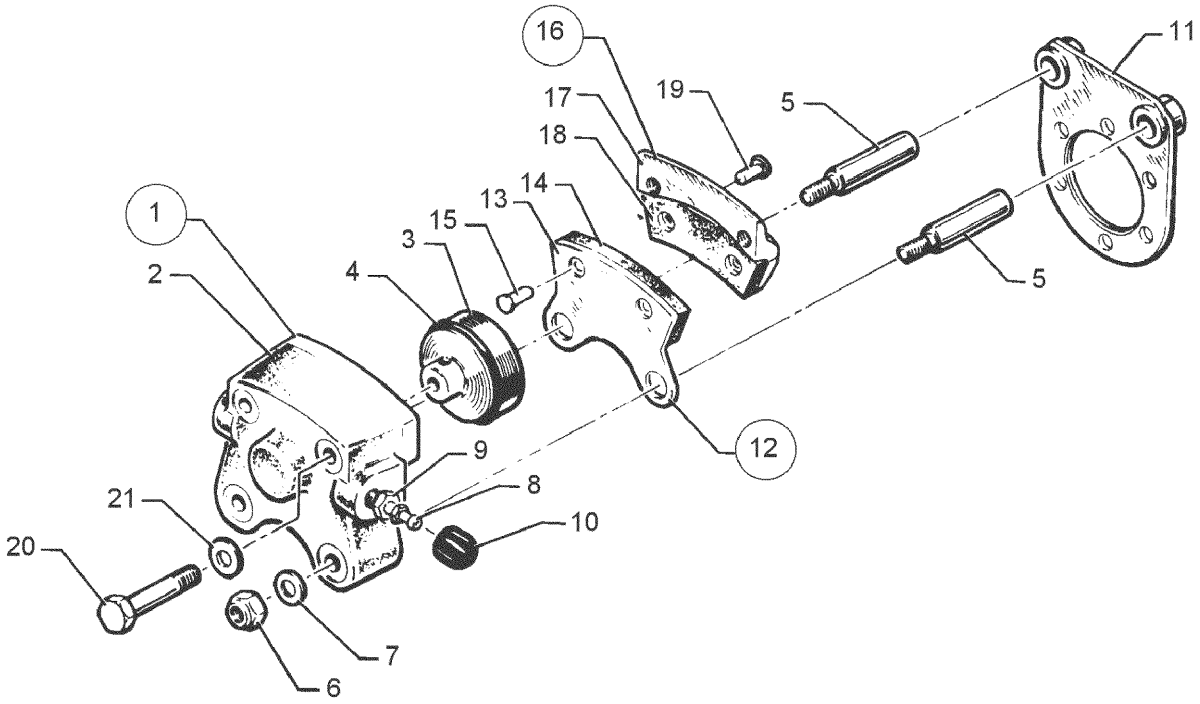


Figure 25. Brake Assembly

| Figure and Index Number | Part Number | Nomenclature | No. Req. | Serial Numbers Affected |
|---|---|---|---|---|
| 25- | 62211 (W) | DRAWING - Main Gear Installation | | |
| | 65492 (AI) | DRAWING - Main Gear Assy | | |
| 1 | 551-711 | BRAKE ASSY - (30-55) | 2 | |
| 2 | 753-920 | . CYLINDER - Brake (61-21) | 1 | |
| 3 | 755-887 | . PISTON (62-5) | 1 | |
| 4 | 484-945 | . O-RING - (MS28775-222) | 1 | |
| 5 | 753-407 | . BOLT - Anchor (069-00400) | 2 | |
| 6 | 404-490 | . NUT - Anchor bolt (MS21044-N04) | 2 | |
| 7 | 690-613 | . WASHER - Anchor bolt (NAS1149F0432P) | 2 | |
| 8 | 752-965 | . SCREW - Bleeder (079-00300) | 1 | |
| 9 | 752-966 | . SEAT - Bleeder (081-00100) | 1 | |
| 10 | 753-850 | . CAP - Bleeder (183-1) | 1 | |
| 11 | 755-818 | . TORQUE PLATE ASSY (075-01600) | 1 | |
| 12 | 755-883 | . PLATE ASSY - Pressure (073-01100) | 1 | |
| 13 | 755-884 | . . PLATE - Pressure (63-12) | 1 | |
| 14 | 752-342 | . . LINING (66-105) | 1 | |
| -15 | 752-826 | . . RIVET (105-2) | 2 | |
| 16 | 755-885 | . PLATE ASSY - Back (074-01000) | 1 | |
| 17 | 755-886 | . . PLATE - Back (64-15) | 1 | |
| 18 | 752-342 | . . LINING (66-105) | 1 | |
| 19 | 752-826 | . . RIVET (105-2) | 2 | |
| 20 | 753-408 | . BOLT - Through (103-116) | 2 | |
| 21 | 690-613 | . WASHER - Through bolt (NAS1149F0432P) | 2 | |

-ITEM NOT ILLUSTRATED

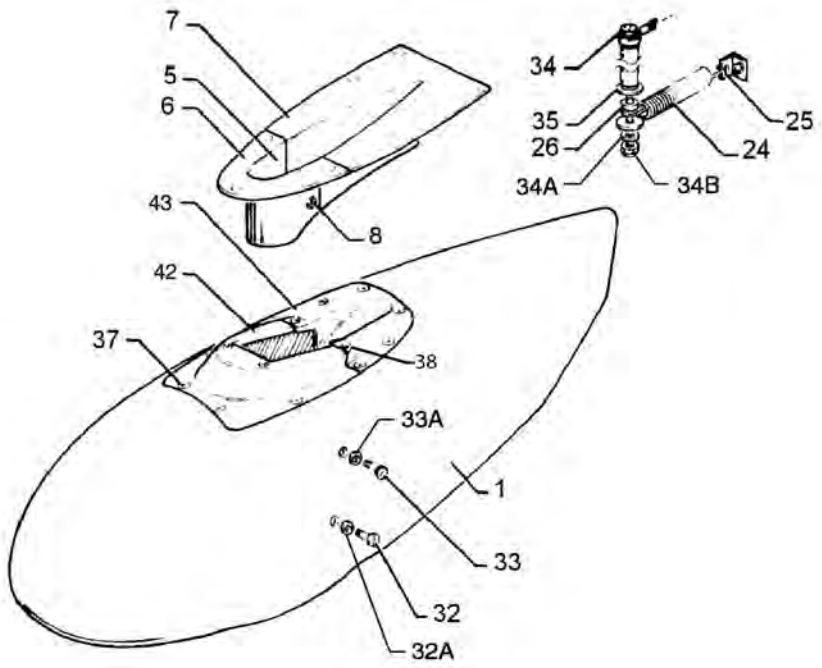


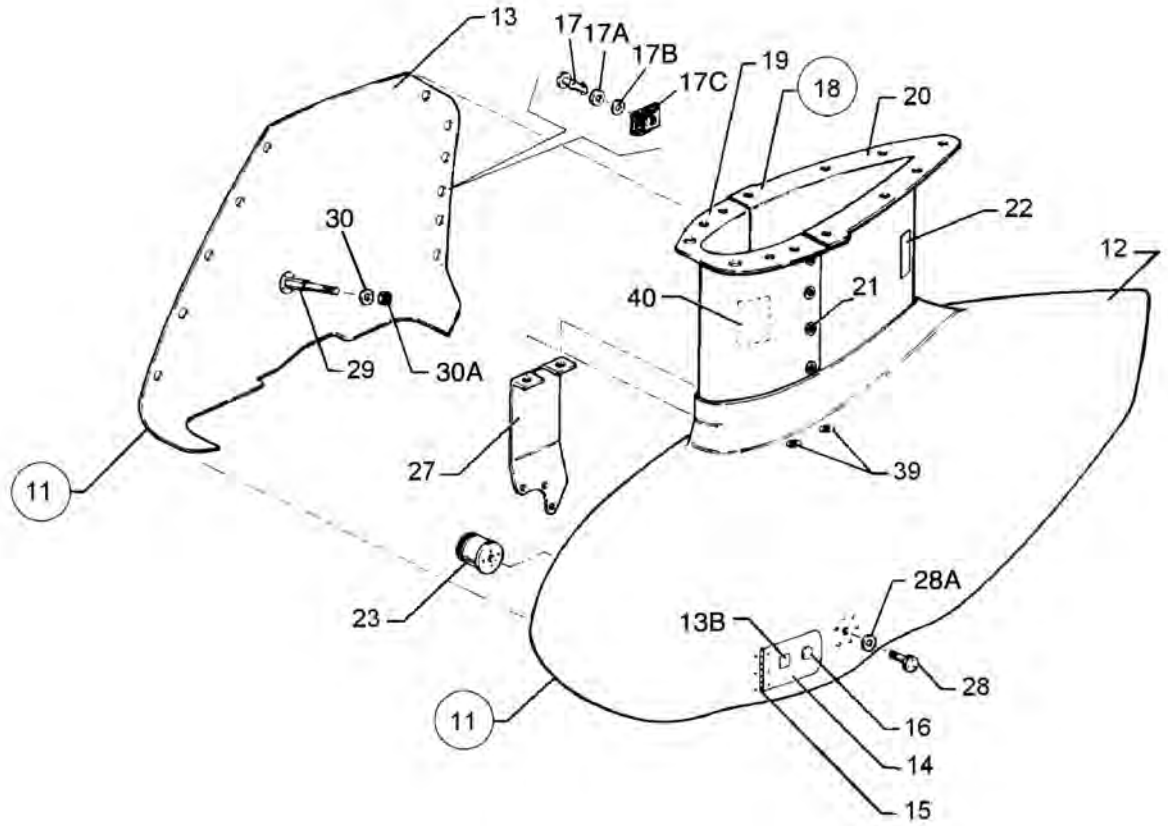


Figure 26. Main and Nose Wheel Fairing Installation

| Figure and Index Number | Part Number | Nomenclature | No. Req. | Serial Numbers Affected |
|---|---|---|---|---|
| 26- | 79893 (G) | DRAWING - Main Wheel Fairing Installation (Fiberglass) | | |
| | 37896 (AF) | DRAWING - Nose Wheel Fairing Installation | | |
| 1 | 35944-015 | FAIRING ASSY - Nose Wheel (fiberglass) | 1 | |
| -2 | 35944-004 | . BULKHEAD ASSY | 1 | |
| -3 | 62833-064 | . WASHER | 4 | |
| 5 | 37925-008 | FAIRING ASSY - Nose gear strut | 1 | |
| 6 | 37925-009 | . FAIRING - Nose gear strut, forward (SEE NOTE 1) | 1 | |
| 7 | 37925-006 | . FAIRING - Nose gear strut, aft (SEE NOTE 1) | 1 | |
| 8 | 414-467 | . SCREW - (MS24693-C51) | 2 | |
| -8A | 494-037 | . WASHER | 2 | |
| -8B | 477-640 | . NUT | 2 | |
| 11 | 79890-041 | FAIRING ASSY - Main wheel, left, complete (fiberglass) | 1 | |
| -11A | 79890-042 | FAIRING ASSY - Main wheel, right, complete (fiberglass) | 1 | |
| 12 | 79890-043 | . SHELL ASSY - Main wheel, outboard, left (fiberglass) | 1 | |
| -12A | 79890-044 | . SHELL ASSY - Main wheel, outboard, right (fiberglass) | 1 | |
| 13 | 79890-045 | . ACCESS ASSY - Main wheel, inboard, left (fiberglass) | 1 | |
| -13A | 79890-046 | . ACCESS ASSY - Main wheel, inboard, right (fiberglass) | 1 | |
| 13B | 35669-044 | . PLACARD - Tire pressure | 1 | |
| 14 | 37882-002 | . DOOR ASSY - Wheel fairing | 1 | |
| 15 | 37882-004 | . . HINGE ASSY - Door | 1 | |
| 16 | 472-017 | . . LATCH - Door | 1 | |
| 17 | 587-594 | . STUD | 15 | |
| 17A | 594-003 | . SEAL - Washer (85-43-201-38) | 15 | |
| 17B | 584-140 | . RETAINER | 15 | |
| 17C | 484-198 | . RECEPTACLE | 15 | |
| 18 | 79892-002 | FAIRING ASSY - Main gear strut, left, complete | 1 | |
| -18A | 79892-003 | FAIRING ASSY - Main gear strut, right, complete | 1 | |
| 19 | 79892-004 | . FAIRING ASSY - Main gear strut, fwd, left (fiberglass) | 1 | |
| -19A | 79892-005 | . FAIRING ASSY - Main gear strut, fwd, right (fiberglass) | 1 | |
| 20 | 79892-010 | . FAIRING ASSY - Main gear strut, aft, left (fiberglass) | 1 | |
| -20A | 79892-009 | . FAIRING ASSY - Main gear strut, aft, right (fiberglass) | 1 | |
| 21 | 587-593 | . STUD | 8 | |
| -21A | 594-003 | . SEAL - Washer (85-43-201-38) | 8 | |
| -21B | 584-140 | . RETAINER | 8 | |
| -21C | 484-198 | . RECEPTACLE | 8 | |
| 22 | 35669-023 | PLACARD - Gear | 1 | |
| -23 | 66821-005 | SUPPORT ASSY - (1.62 long) | 2 | |
| -24 | 37929-002 | SPRING - Nose gear | 2 | |
| -25 | 69486-000 | ANGLE - Nose gear spring attachment | 2 | |
| -25A | 415-535 | SCREW - (MS35206-245) | 2 | |
| -25B | 690-616 | WASHER - (NAS1149FN832P) | 2 | |
| -25C | 404-529 | NUT - (MS21042-08) | 2 | |
| 26 | 63900-108 | BUSHING - Nose gear spring | 2 | |
| 27 | 37880-002 | BRACKET ASSY - Wheel fairing, left | 1 | |
| -27A | 37880-003 | BRACKET ASSY - Wheel fairing, right | 1 | |
| 28 | 400-004 | BOLT - (AN4-7A) | 2 | |
| 28A | 690-611 | WASHER - (NAS1149F0463P) | 2 | |
| 29 | 37881-003 | BOLT - Main wheel fairing attachment (4.22 long) | 2 | |
| 30 | 690-611 | WASHER - (NAS1149F0463P) | AR | |
| 30A | 404-530 | NUT - (MS21042-4) | 2 | |
| 32 | 400-907 | BOLT - Bottom, left and right (AN24-17A) | 2 | |
| 32A | 690-613 | WASHER - (NAS1149F0432P) | 2 | |

-ITEM NOT ILLUSTRATED

When ordering, always specify Part Number, Description, and Serial Number of Aircraft

| Figure and Index Number | Part Number | Nomenclature | No. Req. | Serial Numbers Affected |
|---|---|---|---|---|
| 26- | | | | |
| 33 | 400-907 | BOLT - Top, left and right (AN24-17A) | 2 | |
| 33A | 690-613 | WASHER - (NAS1149F0432P) | 2 | |
| 34 | 400-449 | BOLT - (AN3-24A) | 2 | |
| 34A | 690-609 | WASHER - (NAS1149F0332P) | 6 | |
| 34B | 406-443 | NUT - (NAS679A3W) | 2 | |
| 35 | 407-800 | WASHER - Nose gear spring (AN970-3) | 4 | |
| 37 | 414-762 | SCREW - (MS24693-S51) | 21 | |
| -37A | 494-101 | WASHER | 21 | |
| 38 | 414-762 | SCREW - (MS24693-S51) | 26 | |
| -38A | 494-016 | WASHER - (A3139-017-24A) | 26 | |
| 39 | 416-633 | SCREW - (MS24693-S273) | 4 | |
| -39A | 494-037 | WASHER - (A3235-020-24A) | 4 | |
| 40 | 63933-000 | PLACARD - Oleo service instructions | 2 | |
| -41 | 36559-005 | COVER ASSY | 1 | |
| 42 | 36559-006 | . COVER, Fwd | 1 | |
| 43 | 36559-003 | . COVER, Aft | 1 | |

NOTES:

1. ASCERTAIN MATERIAL THICKNESS OF FAIRING CURRENTLY INSTALLED ON AIRCRAFT. IF EXISTING FAIRING MEASURES 0.093 THICK, A COMPLETE NEW FAIRING ASSY, 37925-002, MUST BE ORDERED AND INSTALLED. IF EXISTING FAIRING MEASURES 0.125 THICK, ORDER INDIVIDUAL FAIRING AS DESIRED.

-ITEM NOT ILLUSTRATED

THIS PAGE INTENTIONALLY LEFT BLANK

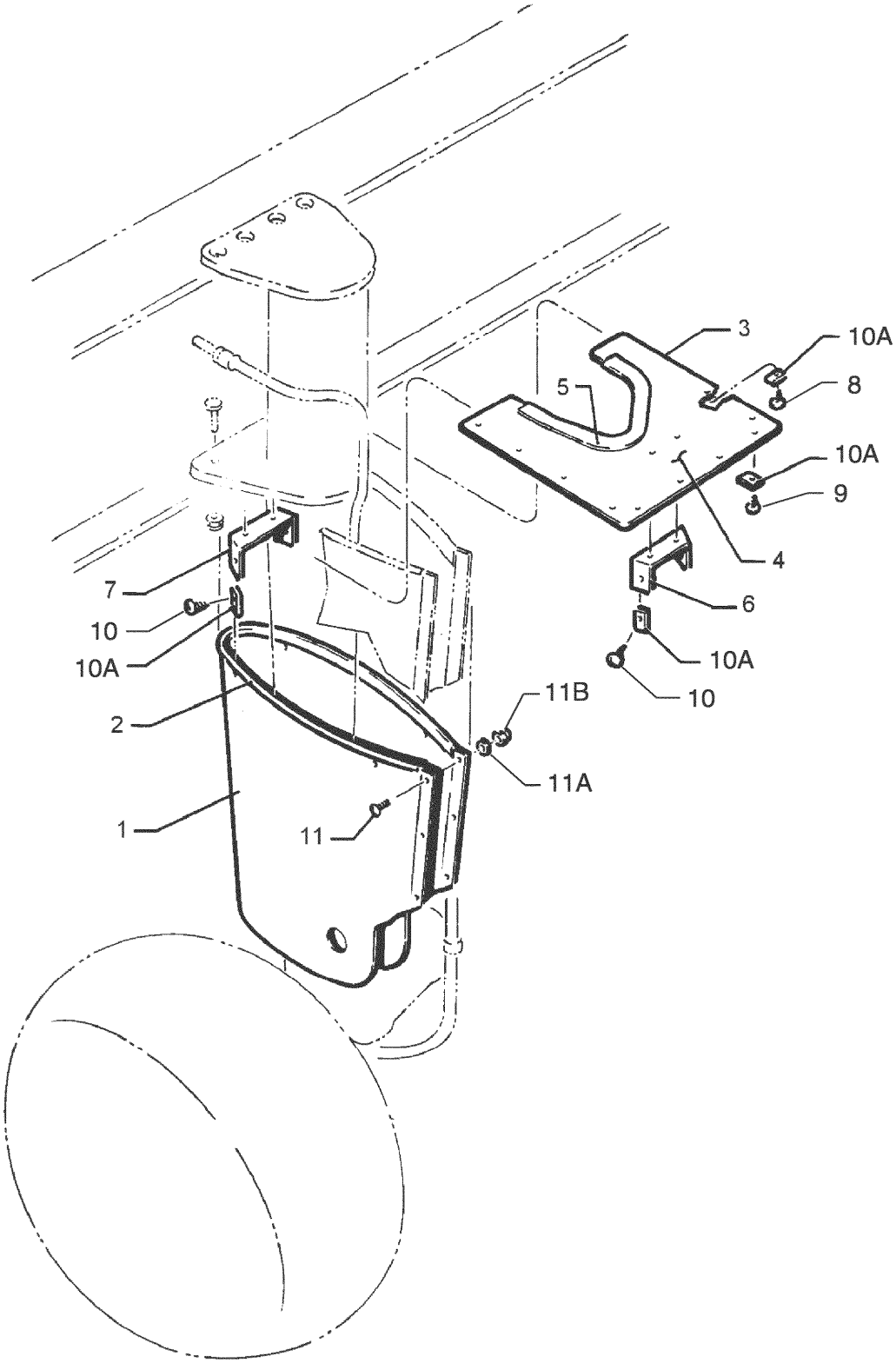


Figure 27. Main Landing Gear Strut Fairing Installation

| Figure and Index Number | Part Number | Nomenclature | No. Req. | Serial Numbers Affected |
|---|---|---|---|---|
| 27- | 65693 C | DRAWING - Main Landing Gear Strut Fairing Installation (Optional) | | |
| | 62211 (W) | DRAWING - Maing Gear Installation | | |
| 1 | 63338-000 | FAIRING ASSY - Main gear | 2 | |
| 2 | 63186-004 | . MOULDING - Extruded | 1 | |
| 3 | 65688-000 | PLATE ASSY - Fairing, left | 1 | |
| -3A | 65688-001 | PLATE ASSY - Fairing, right | 1 | |
| 4 | 65688-002 | . PLATE - Fairing, left | 1 | |
| -4A | 65688-003 | . PLATE - Fairing, right | 1 | |
| 5 | 63186-033 | . MOULDING - Extruded | 1 | |
| 6 | 63341-000 | . CLIP - Fairing | 2 | |
| 7 | 63342-000 | CLIP - Fairing | 2 | |
| 8 | 419-920 | SCREW - (8 x 1/2) | 2 | |
| -8A | 415-535 | SCREW - (AN526-832R8) | 2 | |
| 9 | 415-535 | SCREW - (AN526-832R8) | 8 | |
| 10 | 419-920 | SCREW - (8 x 1/2) | 4 | |
| 10A | 603-350 | NUT | 4 | |
| 11 | 415-171 | SCREW - (AN526-C6-5) | 3 | |
| 11A | 690-640 | WASHER - (NAS1149FN632P) | 3 | |
| 11B | 404-528 | NUT - (MS21042-06) | 3 | |

-ITEM NOT ILLUSTRATED

When ordering, always specify Part Number, Description, and Serial Number of Aircraft

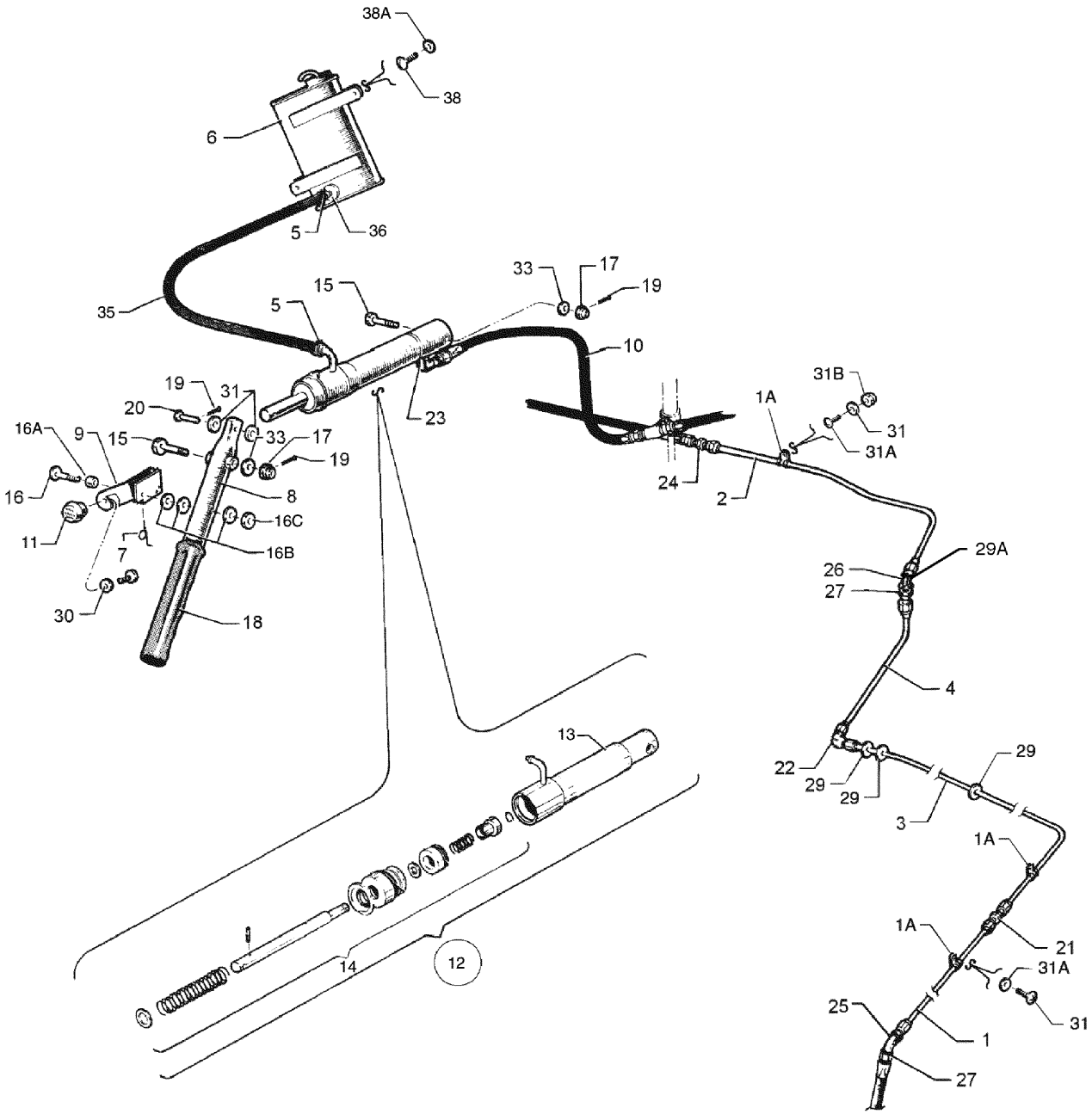


Figure 28. Hand Brake Installation

| Figure and Index Number | Part Number | Nomenclature | No. Req. | Serial Numbers Affected |
|---|---|---|---|---|
| 28 | 65842 (S) | DRAWING - Hand Brake Installation | | |
| | 69312 (Y) | DRAWING - Hand Brake Assy | | |
| 1 | 63325-000 | LINE ASSY | 1 | |
| 1A | 454-929 | CLAMP | 4 | |
| 2 | 63466-000 | LINE ASSY - Right | 1 | |
| 3 | 68467-000 | LINE ASSY | 2 | |
| 4 | 67700-058 | LINE ASSY | 2 | |
| 5 | 554-575 | CLAMP - Hose | 2 | |
| 6 | 63355-009 | RESERVOIR ASSY - Brake cylinder | 1 | |
| 7 | 63356-000 | SPRING - Brake handle | 1 | |
| 8 | 63357-000 | HANDLE ASSY - Brake | 1 | |
| 9 | 67135-003 | LATCH ASSY - Brake handle | 1 | |
| 10 | 63901-009 | HOSE ASSY - Flexible | 1 | |
| -10A | 63901-059 | HOSE ASSY - Flexible (optional) | 1 | |
| 11 | 63914-007 | KNOB ASSY - Parking brake | 1 | |
| 12 | 455-938 | CYLINDER ASSY - Master (10-22) | 1 | |
| 13 | 753-956 | . HYDRAULIC CYLINDER ASSY | 1 | |
| 14 | 755-948 | . PISTON ROD ASSY | 1 | |
| 15 | 400-113 | BOLT - (AN4-20) | 2 | |
| 16 | 400-876 | B0LT - (AN23-24A) | 1 | |
| 16A | 63900-131 | BUSHING | 1 | |
| 16B | 690-612 | WASHER - (NAS1149F0363P) | 3 | |
| 16C | 404-526 | NUT - (MS21042-3) | 4 | |
| 17 | 404-101 | NUT - (AN310-4) | 2 | |
| 18 | 463-380 | GRIP - Brake handle | 1 | |
| -18A | 411-530 | SCREW - (MS35207-261) | 1 | |
| -18B | 407-043 | WASHER - (MS35338-43) | 1 | |
| 19 | 424-051 | PIN - (MS24665-132) | 3 | |
| 20 | 424-178 | PIN - (AN393-19) | 1 | |
| 21 | 491-050 | UNION - (AN815-4D) | 2 | |
| 22 | 458-881 | ELBOW - (AN821-4D) | 2 | |
| -23 | 458-894 | ELBOW - (MS20822-4D) | 2 | |
| -24 | 491-050 | UNION - (AN815-4D) | 1 | |
| -25 | 458-910 | ELBOW - (AN837-4D) | 2 | |
| -26 | 458-910 | ELBOW - Left (AN837-4D) (Non Entegra) | 1 | 2843001 thru 2843600 |
| 26 | 458-900 | ELBOW - Left (AN833-4D) | 1 | |
| | | (Non Entegra - 2843601 and up, Entegra 2843598 and up) | | |
| -26A | 491-060 | UNION - Right (AN832-4D) | 1 | |
| 27 | 477-618 | NUT - (AN924-4D) | 4 | |
| 29 | 434-151 | GROMMET - (MS35489-10S) | 4 | |
| 29A | 434-132 | GROMMET - (MS35489-19) | 2 | |
| 30 | 407-124 | LOCKWASHER - (AN935-10L) | 1 | |
| 31 | 411-532 | SCREW - (MS35207-263) | 4 | |
| 31A | 690-609 | WASHER - (NAS1149F0332P) | 4 | |
| 31B | 404-526 | NUT - (MS21042-3) | 4 | |
| 33 | 690-611 | WASHER - (NAS1149F0463P) | 2 | |
| 35 | 63913-010 | HOSE - Flexible | 1 | |
| 36 | 63915-006 | DISC - Firewall seal | 1 | |
| 38 | 411-531 | SCREW - (MS35207-262) | 2 | |
| 38A | 690-612 | WASHER - (NAS1149FN363P) | 2 | |

-ITEM NOT ILLUSTRATED

When ordering, always specify Part Number, Description, and Serial Number of Aircraft

THIS PAGE INTENTIONALLY LEFT BLANK

THIS PAGE INTENTIONALLY LEFT BLANK

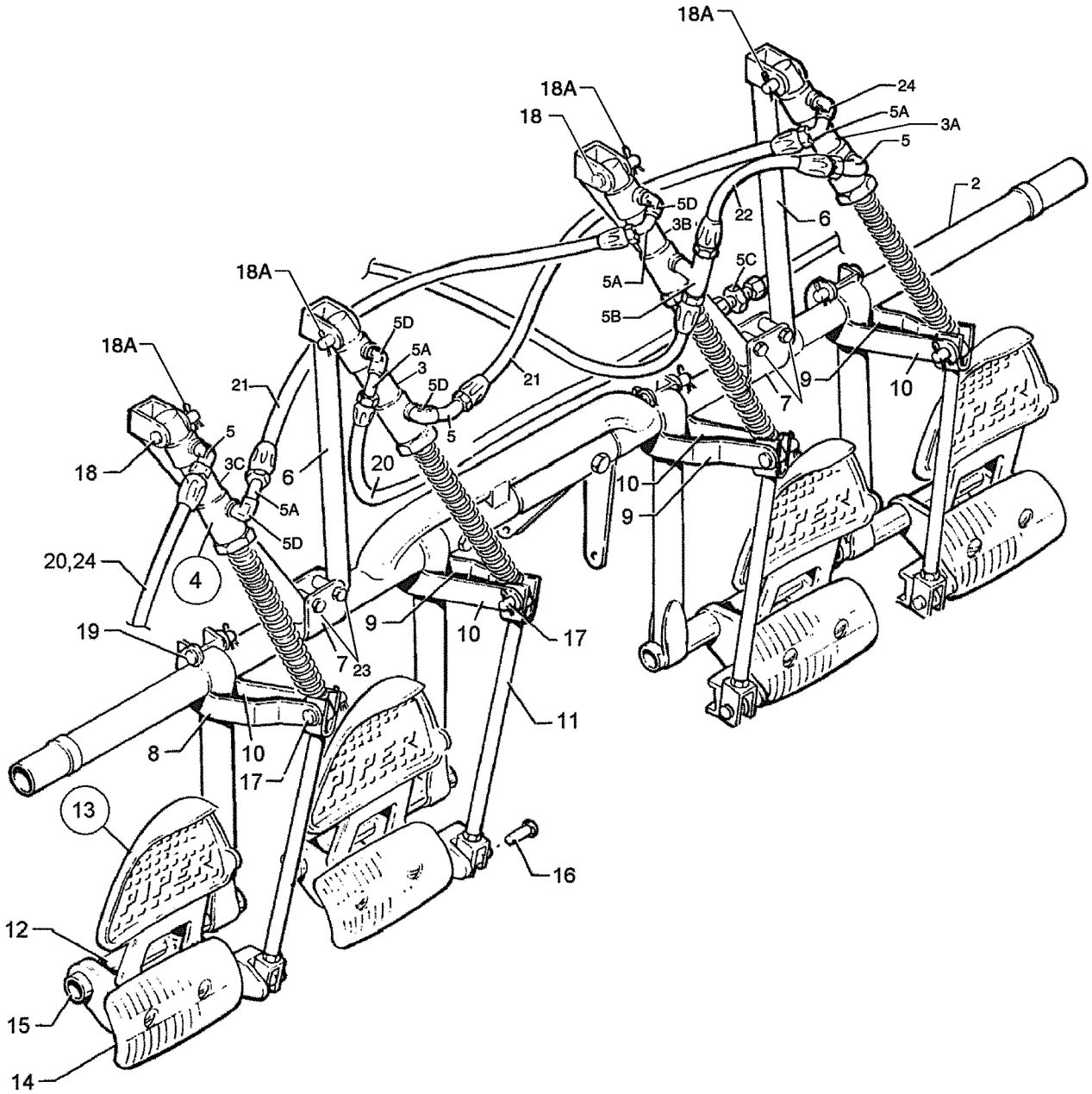


Figure 29. Toe Brake Installation

| Figure and Index Number | Part Number | Nomenclature | No. Req. | Serial Numbers Affected |
|---|---|---|---|---|
| 29- | 63476 (P) | DRAWING - Dual Toe Brake Line Installation | | |
| | 35135 (BN) | DRAWING - Control System Installation | | |
| -1 | 63473-007 | CYLINDER ASSY - Dual Toe Brake | RF | |
| 2 | 63459-019 | PEDAL ASSY | 1 | |
| 3 | 63481-009 | FITTING ASSY | 1 | |
| 3A | 63481-002 | FITTING ASSY | 1 | |
| 3B | 63481-003 | FITTING ASSY | 1 | |
| 3C | 63481-005 | FITTING ASSY | 4 | |
| 4 | 455-968 | CYLINDER ASSY - Master, Cleveland (See Figure 30 for component parts) | RF | |
| -4A | 455-944 | CYLINDER ASSY - Master, Gar-Kenyon (optional) (See Figure 30 for component parts) | RF | |
| 5 | 458-894 | ELBOW - (MS20822-4D) | 3 | |
| 5A | 558-806 | ELBOW - (MS20823-4D) | 4 | |
| 5B | 691-220 | TEE - (MS20825-4D) | 1 | |
| 5C | 491-050 | UNION - (AN815-4D) | 1 | |
| 5D | 458-904 | ELBOW - (AN914-1D) | 5 | |
| 6 | 63464-000 | BRACE ASSY - Toe brake | 2 | |
| 7 | 63468-000 | BRACKET - Toe brake | 2 | |
| 8 | 63469-000 | ARM - Toe brake | 1 | |
| 9 | 63469-001 | ARM - Toe brake | 3 | |
| 10 | 63470-000 | ARM - Toe brake | 4 | |
| 11 | 79430-000 | CLEVIS ASSY - Toe brake (non-adjustable) | 4 | |
| 12 | 63478-000 | SPACER - Toe brake | 4 | |
| -12A | 400-443 | BOLT - (AN3-12A) | 4 | |
| -12B | 690-612 | WASHER - (NAS1149F0363P) | 4 | |
| -12C | 404-526 | NUT - (MS21042-3) | 4 | |
| 13 | 63485-000 | PEDAL ASSY - Toe brake, left inboard | 1 | |
| -13A | 63485-002 | PEDAL ASSY - Toe brake, left outboard | 1 | |
| -13B | 63485-001 | PEDAL ASSY - Toe brake, right inboard | 1 | |
| -13C | 63485-003 | PEDAL ASSY - Toe brake, right outboard | 1 | |
| 14 | 62867-002 | . PAD ASSY - Brake pedal | 1 | |
| 15 | 453-714 | BEARING - Brake pedal | 8 | |
| 16 | 424-175 | PIN - Flat head (MS20392-2C13) | 4 | |
| -16A | 690-612 | WASHER - (NAS1149F0363P) | 4 | |
| -16B | 690-609 | WASHER - (NAS1149F0332P) | 4 | |
| -16C | 424-051 | COTTER PIN - (MS24665-132) | 4 | |
| 17 | 424-181 | PIN - Flat head (MS20392-2C25) | 4 | |
| 18 | 424-184 | PIN - Flat head (MS20392-2C31) | 4 | |
| 18A | 424-051 | COTTER PIN - (MS24665-132) | 4 | |
| -18B | 690-612 | WASHER - (NAS1149F0363P) | 4 | |
| 19 | 424-189 | PIN - Flat head (MS20392-2C39) | 4 | |
| 20 | 63901-009 | HOSE ASSY - Flexible (See item 29-24) | 2 | |
| -20A | 63901-059 | HOSE ASSY - Flexible (optional) (See item 29-24) | 2 | |
| 21 | 63901-021 | HOSE ASSY - Flexible | 2 | |
| -21A | 63901-061 | HOSE ASSY - Flexible (optional) | 2 | |
| 22 | 63901-022 | HOSE ASSY - Flexible | 1 | |
| -22A | 63901-062 | HOSE ASSY - Flexible (optional) | 2 | |
| 23 | 400-444 | BOLT - (AN3-13A) | 4 | |
| -23A | 690-612 | WASHER - (NAS1149F0363P) | 4 | |
| -23B | 404-526 | NUT - (MS21042-3) | 4 | |
| -24 | 63901-063 | HOSE ASSY - Flexible | 1 | 2843598 and up Entegra; 2843601 and up Non Entegra |
| -24A | 63901-028 | HOSE ASSY - Flexible (optional) | 1 | 2843598 and up Entegra; 2843601 and up Non Entegra |

-ITEM NOT ILLUSTRATED

When ordering, always specify Part Number, Description, and Serial Number of Aircraft

Revised: June 10, 2007

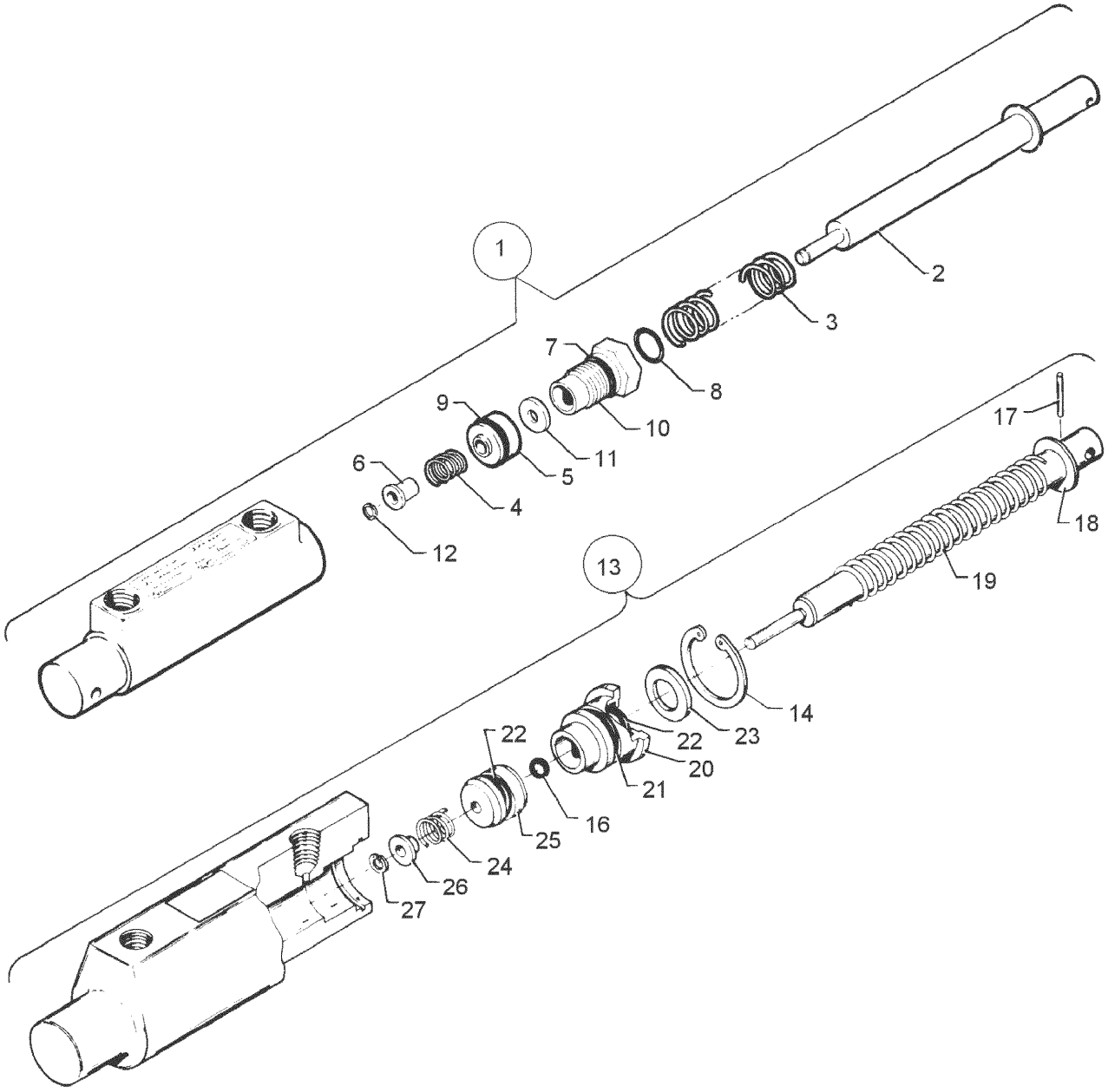


Figure 30. Toe Brake Master Cylinder Assembly

| Figure and Index Number | Part Number | Nomenclature | No. Req. | Serial Numbers Affected |
|---|---|---|---|---|
| 30- | 35135 (BM) | DRAWING - Control System Installation | | |
| 1 | 455-944 | CYLINDER ASSY - Master, Gar-Kenyon (17000) | 4 | |
| 2 | 757-480 | . PISTON ROD AND RING ASSY - Includes spring retaining ring (95404) | 1 | |
| 3 | 762-276 | . SPRING - (17005) | 1 | |
| 4 | 762-277 | . SPRING - (17006) | 1 | |
| 5 | 757-479 | . PISTON - (17003) | 1 | |
| 6 | 762-275 | . SLEEVE - (17007) | 1 | |
| 7 | 752-584 | . O-RING - (MS28775-113) | 1 | |
| 8 | 484-788 | . O-RING - (MS28775-012) | 1 | |
| 9 | 752-585 | . O-RING - (MS28775-110) | 1 | |
| 10 | 754-848 | . FITTING - (17002) | 1 | |
| 11 | 494-177 | . SEAL - (110-3/16) | 1 | |
| 12 | 762-531 | . RING - Retaining (XRC-313) | 1 | |
| 13 | 455-968 | CYLINDER ASSY - Master, Cleveland (10-30) | 4 | |
| 14 | 762-587 | . RING - Snap (155-04700) | 1 | |
| 16 | 484-675 | . O-RING - (MS28775-006) | 1 | |
| 17 | 757-318 | . ROLL PIN - (MS16562-16) | 1 | |
| 18 | 690-620 | . WASHER - (NAS1149F0632P) | 1 | |
| 19 | 756-118 | . SPRING - (82-9) | 1 | |
| 20 | 755-082 | . GLAND - Packing (114-25) | 1 | |
| 21 | 756-018 | . O-RING - (101-50113) | 1 | |
| 22 | 484-748 | . O-RING - (AN6227-8) | 2 | |
| 23 | 756-621 | . WASHER - Wiper (095-1300) | 1 | |
| -24 | 757-580 | . SPRING - (082-021) | 1 | |
| -25 | 763-450 | . PISTON - (148-25) | 1 | |
| -26 | 758-457 | . BUSHING - (145-05800) | 1 | |
| 27 | 762-586 | . RING - Snap (155-48) | 1 | |

-ITEM NOT ILLUSTRATED

When ordering, always specify Part Number, Description, and Serial Number of Aircraft

**GRIDS 1E20 THRU 1E24**
**INTENTIONALLY BLANK**

# SECTION V
# CABIN EQUIPMENT GROUP

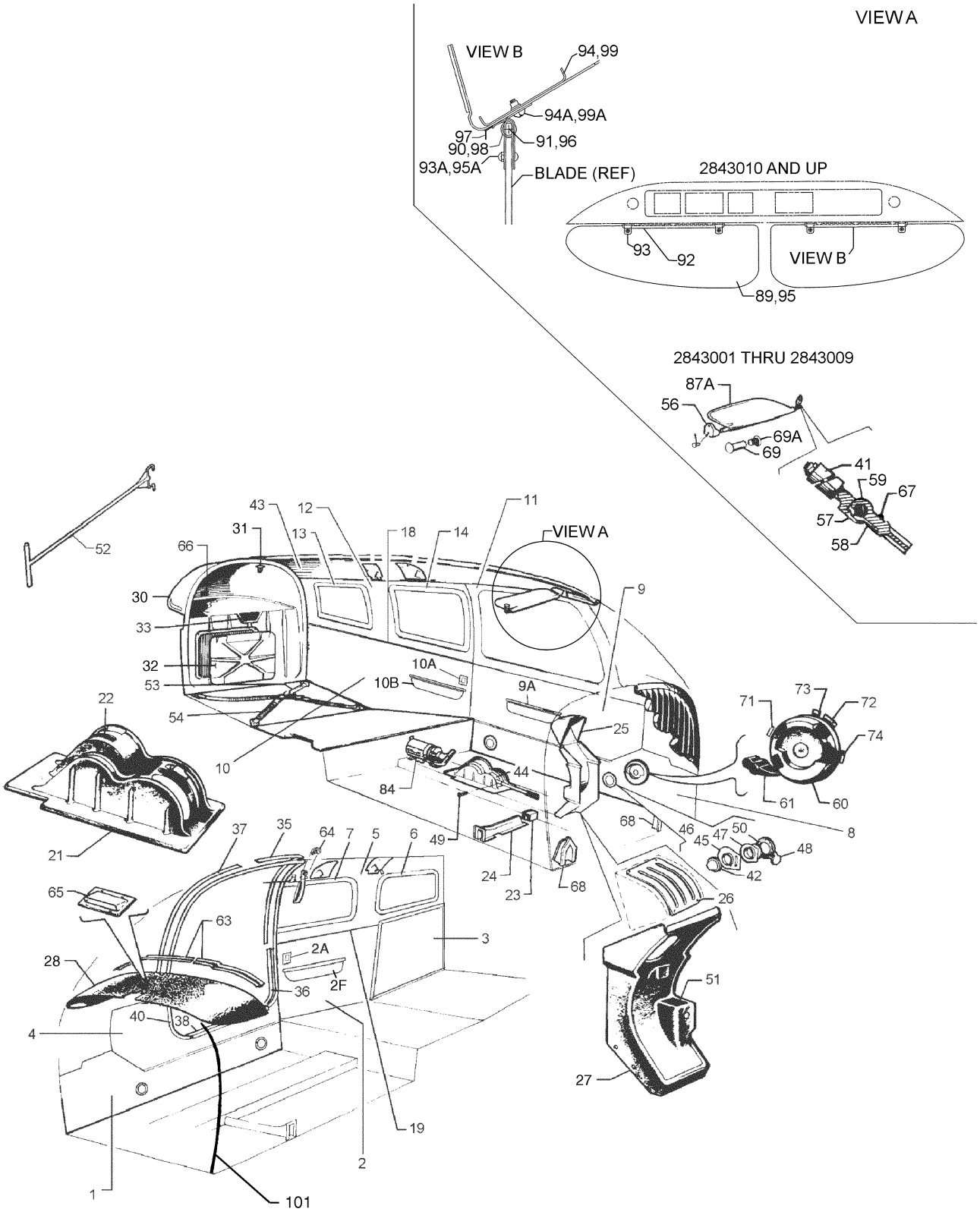


Figure 31. Interior Installation

| Figure and Index Number | Part Number | Nomenclature | No. Req. | Serial Numbers Affected |
|---|---|---|---|---|
| 31- | 84278 (AI) | DRAWING - Interior Installation | | |
| | 99458 (B) | DRAWING - Tow Bar Assy | | |
| | 66991 (AF) | DRAWING - Sun Visor Installation | | 2843001 thru 2843009 |
| | 100880 (D) | DRAWING - Sun Visor Installation | | 2843010 thru 2843337 |
| | 104530 (D) | DRAWING - Sun Visor Installation | | 2843338 and up |
| | 85365 (H) | DRAWING - Extrusion Installation | | |
| | 82235 (F) | DRAWING - Fire Extinguisher Installation | | |
| | 78734 (V) | DRAWING - Bulkhead Installation | | |
| | 87452 (E) | DRAWING - Holder Installation | | |
| | 66804 (N) | DRAWING - Strap Assy | | |
| | 66805 (M) | DRAWING - Strap Assy | | |
| | 99827 (E) | DRAWING - Blanket Installation - Firewall | | |
| 1 | 84277-010 | PANEL ASSY - Cockpit, right side, lower fwd | 1 | |
| 2 | 84277-005 | PANEL ASSY - Right side, lower (Specify color when ordering) | 1 | 2843001 thru 2843077 |
| 2 | 84277-092 | PANEL ASSY - Right side, lower (Specify color when ordering) | 1 | 2843078 and up |
| 2A | 85210-006 | . SWITCH ASSY | 1 | 2843078 and up |
| -2B | 89908-002 | . . LIGHT SWITCH ASSY | 1 | |
| -2C | 688-374 | . . SWITCH | 1 | |
| -2D | 85210-070 | . . COVER - Switch | 1 | |
| -2E | 69669-200 | . . PLACARD | 1 | |
| 2F | 84277-018 | . ARMREST ASSY (Specify color when ordering) | 1 | |
| 3 | 84277-016 | PANEL ASSY - Baggage door | 1 | |
| 4 | 84277-015 | PANEL ASSY - Right side, middle | 1 | |
| 5 | 84277-004 | PANEL ASSY - Right side, upper (Specify color when ordering) | 1 | 2843001 thru 2843336 |
| 5 | 84277-200 | PANEL ASSY - Right side, upper (Specify color when ordering) | 1 | 2843337 and up |
| -5A | 89567-002 | . BEZEL - Shoulder harness | 2 | 2843001 thru 2843336 |
| -5A | 89567-016 | . BEZEL - Shoulder harness | 2 | 2843337 and up |
| -5B | 76221-000 | . CLIP - Shoulder harness | 1 | 2843001 thru 2843336 |
| 6 | 84277-020 | REVEAL ASSY - Window, right side, aft | 1 | |
| 7 | 84277-019 | REVEAL ASSY - Window, right side, forward | 1 | |
| 8 | 84277-009 | PANEL ASSY - Cockpit, left side, lower | 1 | |
| 9 | 84277-011 | PANEL ASSY - Left side, middle (Specify color when ordering) | 1 | 2843001 thru 2843077 |
| 9 | 84277-094 | PANEL ASSY - Left side, middle (Specify color when ordering) | 1 | 2843078 and up |
| 9A | 84277-024 | . ARMREST ASSY (Specify color when ordering) | 1 | 2843001 thru 2843077 |
| 9A | 84277-096 | . ARMREST ASSY (Specify color when ordering) | 1 | 2843078 and up |
| 10 | 84277-007 | PANEL ASSY - Left side, lower (Specify color when ordering) | 1 | 2843001 thru 2843077 |
| 10 | 84277-093 | PANEL ASSY - Left side, lower (Specify color when ordering) | 1 | 2843078 and up |
| 10A | 85210-006 | . SWITCH ASSY - (See item 31-2A for component parts) | 1 | 2843078 and up |
| 10B | 84277-017 | . ARMREST ASSY (Specify color when ordering) | 1 | 2843078 and up |
| 11 | 84277-152 | PANEL ASSY - Pilot side window (Specify color when ordering) | 1 | |
| 11 | 84277-153 | PANEL ASSY - Pilot side window (Specify color when ordering) | 1 | |
| 11 | 84277-154 | PANEL ASSY - Pilot side window (Specify color when ordering) | 1 | |

-ITEM NOT ILLUSTRATED

| Figure and Index Number | Part Number | Nomenclature | No. Req. | Serial Numbers Affected |
|---|---|---|---|---|
| 31- | | | | |
| 11 | 84277-155 | PANEL ASSY - Pilot side window (Specify color when ordering) | 1 | |
| 11 | 84277-210 | PANEL ASSY - Pilot side window (Entegra) (Specify color when ordering) | 1 | 2843598 and up |
| 11 | 84277-008 | PANEL ASSY - Pilot side window (Specify color when ordering) | 1 | |
| 12 | 84277-199 | PANEL ASSY - Left side, upper, rear (Specify color when ordering) | 1 | 2843337 and up |
| 12 | 84277-006 | PANEL ASSY - Left side, upper, rear (Specify color when ordering) | 1 | 2843001 thru 2843336 |
| -12A | 89567-016 | . BEZEL - Shoulder harness | 2 | 2843337 and up |
| -12A | 89567-002 | . BEZEL - Shoulder harness | 2 | 2843001 thru 2843336 |
| 13 | 84277-022 | REVEAL ASSY - Window, left side, aft | 1 | |
| 14 | 84277-021 | REVEAL ASSY - Window, left side, forward | 1 | |
| 15 | 83396-002 | PANEL ASSY - Overhead | 1 | |
| 15 | 83396-003 | PANEL ASSY - Overhead (Used if air conditioning is installed) | 1 | |
| 16 | 84277-003 | PANEL ASSY - Headliner (Used if air conditioning is installed) | 1 | |
| 16 | 84277-026 | PANEL ASSY - Headliner | 1 | |
| 17 | 84277-073 | DUCT - Overhead | 1 | |
| 18 | 85365-010 | EXTRUSION | 1 | |
| 19 | 85365-011 | EXTRUSION | 1 | |
| 20 | 85365-009 | EXTRUSION | 2 | |
| 21 | 67917-017 | COVER ASSY - Flap handle (Specify color when ordering) | 1 | 2843001 thru 2843202 |
| 21 | 67785-017 | COVER ASSY - Flap handle (Specify color when ordering) | 1 | 2843203 and up |
| 22 | 67786-000 | PLACARD - Stabilator trim (See Figure 72) | RF | |
| 23 | 63144-000 | COVER - Fuselage frame, inboard, sta. 73.04 | 1 | |
| -24 | 65674-015 | COVER ASSY - Fuselage frame, sta. 73.04 (Specify color when ordering) | 2 | |
| -25 | 67232-047 | COVER ASSY - Engine controls | 1 | |
| -25A | 65846-002 | . PLACARD - (683-381) (See Figure 72) | RF | 2843415 and up |
| -25A | 65846-000 | . PLACARD - (581-045) (See Figure 72) | RF | 2843001 thru 2843414 |
| -25B | 419-935 | . SCREW | 4 | |
| -26 | 84967-174 | . DECAL - Engine controls | 1 | |
| 27 | 67330-012 | COVER - Console | 1 | |
| 28 | 84277-062 | COVER - Cowl deck | 1 | 2843001 thru 2843444 |
| 28 | 84277-209 | COVER - Cowl deck | 1 | 2843445 and up |
| 28 | 101966-002 | COVER - Cowl deck (Entegra) | 1 | 2843598 and up |
| -28A | 84278-012 | . SCREEN - Cowl deck cover (Entegra) | 1 | 2843598 and up |
| -29 | 79849-009 | BULKHEAD INSTL | 1 | |
| 30 | 79836-004 | . BULKHEAD ASSY - Rear cabin | 1 | |
| 31 | 487-629 | . . STUD ASSY - (KM894-1A) | 1 | |
| 32 | 79445-000 | . DOOR ASSY - Access cover | 1 | |
| 33 | 69669-151 | PLACARD - Baggage limitation (See Figure 72) | RF | |
| 35 | 63142-055 | TRIM STRIP - Door frame, top rear | 1 | |
| 36 | 63142-056 | TRIM STRIP - Door frame, bottom rear | 1 | |
| 37 | 63142-051 | TRIM STRIP - Door frame, front | 1 | |
| 38 | 76191-003 | SILL - Door | 1 | |
| -38A | 419-806 | SCREW - (MS21207C6-6) | 6 | |
| -38B | 508-007 | WASHER | 6 | |
| 40 | 69403-003 | WINDLACING - Door seal, white | 1 | |
| 41 | 65869-000 | BEARING - Sun visor | 2 | 2843001 thru 2843009 |

-ITEM NOT ILLUSTRATED

When ordering, always specify Part Number, Description, and Serial Number of Aircraft

| Figure and Index Number | Part Number | Nomenclature | No. Req. | Serial Numbers Affected |
|---|---|---|---|---|
| 31- | | | | |
| 42 | 65735-018 | CUP - Air vent (Specify color when ordering) | 4 | |
| 43 | 76462-000 | HEADLINER - Cockpit | 1 | |
| 44 | 65672-005 | SHIELD - Flap handle cover | 1 | |
| 45 | 65735-019 | FLANGE - Air vent (Specify color when ordering) | 4 | |
| 46 | 68416-002 | VENT ASSY - Air, forward, left (complete) | 1 | |
| -46A | 68416-003 | VENT ASSY - Air, forward, right (complete) | 1 | |
| -46B | 68556-000 | VENT ASSY - Air, aft, left (complete) | 1 | |
| -46C | 68556-001 | VENT ASSY - Air, aft, right (complete) | 1 | |
| 47 | 68671-000 | . VALVE ASSY - Air vent | 1 | |
| 48 | 68499-004 | . SHAFT ASSY - Air vent valve, left | 1 | |
| -48A | 68499-005 | . SHAFT ASSY - Air vent valve, right | 1 | |
| 49 | 15086-000 | SCREW - Self tapping | 2 | |
| 50 | 68584-000 | GASKET - Air vent assy | 4 | |
| 51 | 65219-000 | PLACARD - Rudder trim (See Figure 72) | 1 | |
| -51A | 84967-175 | PLACARD - Rudder trim (See Figure 72) | 1 | |
| 52 | 99458-000 | TOW BAR ASSY | 1 | |
| 53 | 66804-000 | STRAP ASSY - Baggage tie down (tip end), black (487-752) | 2 | |
| 54 | 66805-000 | STRAP ASSY - Baggage tie down (buckle end), black (487-753) | 2 | |
| 56 | 65865-000 | RETAINER - Sun visor | 2 | 2843001 thru 2843009 |
| 57 | 65867-000 | ROD - Sun visor | 2 | 2843001 thru 2843009 |
| 58 | 65871-000 | CLIP - Sun visor, lower left and upper right | 2 | 2843001 thru 2843009 |
| 59 | 65870-000 | CLIP - Sun visor, upper left and lower right | 2 | 2843001 thru 2843009 |
| 60 | 99635-009 | COVER ASSY - Fuel selector (Specify color when ordering) | 1 | |
| 61 | 99181-003 | HANDLE ASSY - Fuel selector valve | 1 | |
| 63 | 89305-026 | GLARESHEILD INSTL - (Entegra) | 1 | 2843598 and up |
| 63 | 89305-022 | GLARESHEILD INSTL | 1 | |
| 64 | 79456-000 | CAP - Assist strap | 1 | |
| 65 | 79404-000 | COVER - Trim, radio cooling | 1 | |
| 66 | 66787-000 | PLACARD - Cabin bulkhead | 1 | |
| 67 | 415-376 | SCREW - (MS51957-27) | 4 | 2843001 thru 2843009 |
| -67A | 477-696 | NUT - Dome (8061-NP) | 4 | 2843001 thru 2843009 |
| 68 | 78735-002 | COVER - Rudder pedal stop bracket | 2 | |
| 69 | 36588-002 | POST | 1 | 2843001 thru 2843009 |
| 69A | 36588-003 | SCREW | 1 | 2843001 thru 2843009 |
| -69B | 690-609 | WASHER - (NAS1149F0332P) | 1 | 2843001 thru 2843009 |
| 71 | 99184-002 | PLACARD - Fuel off (See Figure 72) | RF | |
| 72 | 99184-005 | PLACARD - Fuel (See Figure 72) | RF | |
| 73 | 99184-007 | PLACARD - Left tank (See Figure 72) | RF | |
| 74 | 99184-008 | PLACARD - Right tank (See Figure 72) | RF | |
| -82 | —- —- | DELETED | | |
| 83 | 85311-004 | LIGHT ASSY | 2 | |
| -83A | 419-806 | SCREW - (MS21207-C6-8) | 4 | |
| 84 | 100632-002 | EXTINGUISHER | 1 | |
| -84A | 82227-002 | BRACKET | 2 | |
| -85 | 87452-006 | CREW CUP - Holder (optional) | 1 | |
| -86 | 68488-002 | INDICATOR - Stab trim | 1 | |
| -87 | 79785-002 | BLADE ASSY - Sun visor | 1 | 2843001 thru 2843009 |
| 87A | 65866-000 | BLADE - Sun visor | 1 | 2843001 thru 2843009 |
| -88 | 100872-002 | BLADE ASSY - Sun visor, pilot | 1 | 2843010 thru 2843337 |
| 88A | 100872-003 | BLADE ASSY - Sun visor, co-pilot | 1 | 2843010 thru 2843337 |
| 89 | 100873-002 | . BLADE - Sun visor | 1 | 2843010 thru 2843337 |
| 90 | 100873-006 | . STOP - Sun visor | 2 | 2843010 thru 2843337 |
| 91 | 100873-005 | . PIN - Hinge, sun visor | 1 | 2843010 thru 2843337 |
| 92 | 100873-003 | . HINGE - Sun visor, grey | 1 | 2843010 thru 2843337 |

-ITEM NOT ILLUSTRATED

When ordering, always specify Part Number, Description, and Serial Number of Aircraft

| Figure and Index Number | Part Number | Nomenclature | No. Req. | Serial Numbers Affected |
|---|---|---|---|---|
| 31- | | | | |
| 92 | 100873-007 | . HINGE - Sun visor, sail white | 1 | 2843203 thru 2843337 |
| 93 | 100873-004 | . SHOE - Sun visor, grey | 2 | 2843010 thru 2843337 |
| 93 | 100873-011 | . SHOE - Sun visor, sail white | 2 | 2843203 thru 2843337 |
| 94 | 100880-005 | SUPPORT - Sun visor | 2 | 2843010 thru 2843337 |
| -94A | 415-385 | SCREW - Support attach (MS51957-29) | 6 | 2843010 thru 2843337 |
| 95 | 100873-002 | BLADE - Sun visor | 2 | 2843338 and up |
| 96 | 104531-002 | PIN ASSY - Hinge, sun visor | 2 | 2843338 and up |
| 97 | 104532-002 | ANGLE - Sun visor | 2 | 2843338 and up |
| 98 | 104530-005 | CLAMP - Sun visor | 6 | 2843338 and up |
| 99 | 100880-005 | SUPPORT - Sun visor | 2 | 2843338 and up |
| 99A | 415-385 | SCREW - Support attach (MS51957-29) | 6 | 2843338 and up |
| -99B | 690-640 | WASHER - Support attach (NAS1149FN632P) | 6 | 2843338 and up |
| -100 | 766-635 | KIT - Sunvisor Installation | RF | 2843010 and up |
| 101 | 99818-000 | BLANKET ASSY - Firewall | 1 | |

-ITEM NOT ILLUSTRATED

When ordering, always specify Part Number, Description, and Serial Number of Aircraft

THIS PAGE INTENTIONALLY LEFT BLANK

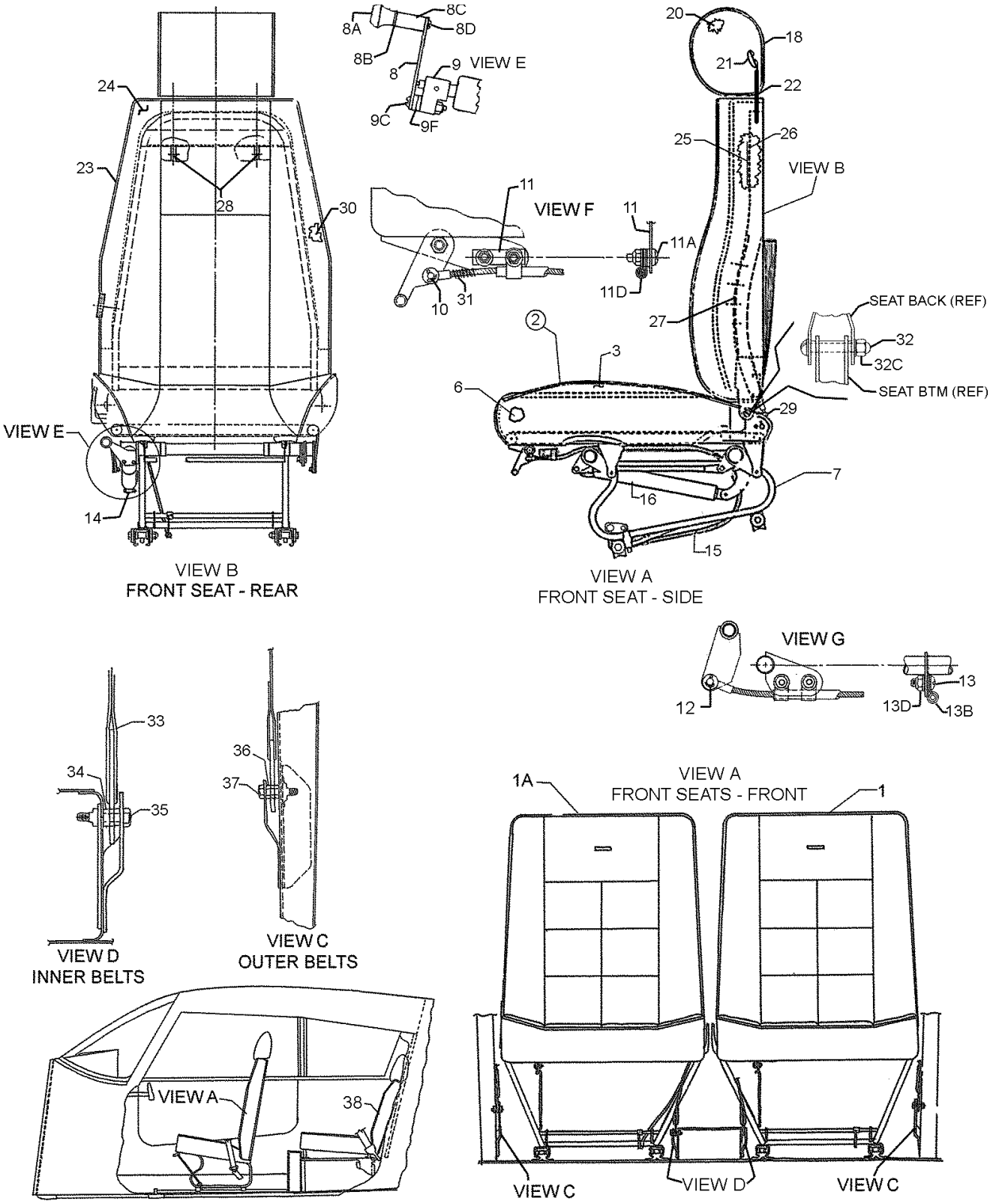


Figure 32. Front Seats Installation

| Figure and Index Number | Part Number | Nomenclature | No. Req. | Serial Numbers Affected |
|---|---|---|---|---|
| 32- | 76170 (BB) | DRAWING - Seats Installation | | |
| 1 | 89026-002 | SEAT ASSY - Front, pilot side | 1 | |
| 1A | 89026-003 | SEAT ASSY - Front, co-pilot side | 1 | |
| 2 | 89026-006 | . BOTTOM ASSY - Pilot side | 1 | |
| -2A | 89026-007 | . BOTTOM ASSY - Co-pilot side | 1 | |
| 3 | 89046-008 | . . COVER - Bottom assy | 1 | |
| -4 | 67771-002 | . . NETTING | 1 | |
| -4A | 484-829 | . . HOG RING | 15 | |
| -5 | 66534-002 | . . ANCHOR WIRE | 1 | |
| 6 | 455-740 | . . CUSHION - (MF-9900-03) | 1 | |
| 6 | 104902-002 | . . CUSHION - (455-770) | 1 | |
| 7 | 79539-002 | . . FRAME - Seat bottom, pilot side (See Figure 34 for component parts) | RF | |
| -7A | 79539-003 | . . FRAME - Seat bottom, co-pilot side (See Figure 34 for component parts) | RF | |
| 8 | 89977-007 | . . CONTROL ARM - Co-pilot side | 1 | |
| 8 | 37902-008 | . . CONTROL ARM - Pilot side | 1 | |
| 8A | 471-084 | . . KNOB - Black (533) | 1 | |
| 8B | 690-659 | . . WASHER - (MS35333-107) | 1 | |
| 8C | 37902-005 | . . SPACER | 1 | |
| 8D | 411-538 | . . SCREW - (MS35207-269) | 1 | |
| 9 | 37902-006 | . . ADAPTOR - (453-008) | 1 | |
| -9A | 400-437 | . . BOLT - (AN3-3A) | 2 | |
| -9B | 95061-109 | . . BUSHING - (553-551) | 2 | |
| 9C | 411-537 | . . SCREW - (MS35207-268) | 2 | |
| -9D | 494-285 | . . WASHER - (85-33-101-27) | 2 | |
| -9E | 406-443 | . . NUT - (NAS 6793W) | 2 | |
| 9F | 690-612 | . . WASHER - (NAS1149F0363P) | 2 | |
| 10 | 424-174 | . . PIN - (MS20392-2C11) | 1 | |
| -10A | 690-609 | . . WASHER - (NAS1149F0332P) | 3 | |
| -10B | 424-051 | . . PIN - (MS24665-132) | 1 | |
| 11 | 76356-002 | . . PLATE | 1 | |
| 11A | 411-533 | . . SCREW - (MS35207-264) | 2 | |
| -11B | 690-612 | . . WASHER - (NAS1149F0363P) | 2 | |
| -11C | 406-443 | . . NUT - (NAS 6793W) | 2 | |
| 11D | 454-887 | . . CLAMP | 2 | |
| 12 | 424-171 | . . PIN - (MS20392-2C7) | 1 | |
| -12A | 690-609 | . . WASHER - (NAS1149F0332P) | 3 | |
| -12B | 424-051 | . . PIN - (MS24665-132) | 1 | |
| 13 | 411-532 | . . SCREW - (MS35207-263) | 2 | |
| -13A | 690-612 | . . WASHER - (NAS1149F0363P) | 2 | |
| 13B | 454-887 | . . CLAMP | 2 | |
| -13C | 690-609 | . . WASHER - (NAS1149F0332P) | 2 | |
| 13D | 406-443 | . . NUT - (NAS 679A3W) | 2 | |
| 14 | 400-907 | . . BOLT - (AN24-17A) | 1 | |
| -14A | 690-613 | . . WASHER - (NAS1149F0432P) | 2 | |
| -14B | 95061-172 | . . BUSHING | 1 | |
| -14C | 404-530 | . . NUT - (MS21042-4) | 1 | |
| 15 | 554-422 | . . CABLE ASSY - Seat track release (Also see figure 34) | 1 | |
| 16 | 587-404 | . . GAS SPRING | 1 | |
| -17 | 89028-002 | . HEADREST ASSY - (optional) | 1 | |
| 18 | 89028-004 | . . COVER - Headrest (optional) | 1 | |
| -19 | 89028-003 | . . FILLER ASSY - Headrest (optional) | 1 | |
| 20 | 455-751 | . . . CUSHION - (MF-9900-08) | 1 | |

-ITEM NOT ILLUSTRATED

When ordering, always specify Part Number, Description, and Serial Number of Aircraft

| Figure and Index Number | Part Number | Nomenclature | No. Req. | Serial Numbers Affected |
|---|---|---|---|---|
| 32- | | | | |
| 20 | 104906-002 | . . . CUSHION | 1 | |
| 21 | 99253-000 | . . . PLATE | 1 | |
| -21A | 554-956 | . . . CLAMP | 2 | |
| -21B | 422-995 | . . . RIVET - (AD44ABS) | 2 | |
| -21C | 690-668 | . . . WASHER - (NAS1149FN432P) | 4 | |
| 22 | 99254-002 | . . . TUBE | 1 | |
| 23 | 89023-016 | . BACK ASSY - Pilot side | 1 | |
| -23A | 89023-017 | . BACK ASSY - Co-pilot side | 1 | |
| -24 | 89023-013 | . . COVER - Seat back | 1 | |
| -25 | 78023-000 | . . BACKING | 1 | |
| -26 | 79555-000 | . . FRAME ASSY - Seat back, pilot side (See figure 34 for component parts) | RF | |
| -26A | 79555-014 | . . FRAME ASSY - Seat back, co-pilot side (See figure 34 for component parts) | RF | |
| 27 | 79880-003 | . . PLATE | 1 | |
| 28 | 460-068 | . . NUT - (PV3750157) | 2 | |
| 29 | 79177-000 | . . NUT - Back adjustment (477-795) | 2 | |
| -29A | 402-777 | . . BOLT - (NAS428-4A13) | 2 | |
| 30 | 104901-002 | . . CUSHION - (455-769) | 1 | |
| 30 | 455-739 | . . CUSHION - (MF-9900-02) | 1 | |
| 31 | 67533-000 | . SPRING - (487-490) | 1 | |
| 32 | 400-916 | . BOLT - Pilot side (AN24-26A) | 2 | |
| -32A | 400-917 | . BOLT - Co-pilot side (AN24-27A) | 2 | |
| -32B | 690-611 | . WASHER - (NAS1149F0463P) | 2 | |
| 32C | 477-708 | . NUT - (SPS-26C-048) | 2 | |
| 33 | 104211-014 | BELT - Seat and shoulder, left side (564-897) (See items 32-39 thru 32-41 for serial numbers prior to 2843337) | 1 | 2843337 and up |
| -33A | 104211-015 | BELT - Seat and shoulder, right side (564-896) (See items 32-39 thru 32-41 for serial numbers prior to 2843337) | 1 | 2843337 and up |
| 34 | 63900-147 | BUSHING, left side | 1 | |
| -34A | 63900-145 | BUSHING, right side | 1 | |
| 35 | 401-269 | BOLT - (AN3-10A) | 2 | |
| -35A | 400-864 | BOLT - (AN23-12A), left side | 1 | |
| -35A | 401-269 | BOLT - (AN3-10A), right side | 1 | |
| -35B | 690-612 | WASHER - (NAS1149F0363P), right side | 1 | |
| 36 | 63900-145 | BUSHING | 2 | |
| 37 | 401-269 | BOLT - (AN3-10A) | 2 | |
| -37A | 690-612 | WASHER - (NAS1149F0363P) | 2 | |
| 38 | 89027-002 | SEAT ASSY - Rear, Pilot side (See figure 35 for component parts) | RF | |
| -38A | 89027-003 | SEAT ASSY - Rear, Co-pilot side (See figure 35 for component parts) | RF | |
| -39 | 564-878 | BELT ASSY - Seat inboard, black | 2 | 2843001 thru 2843336 |
| -40 | 564-876 | BELT ASSY - Seat outboard, adjustable end, black | 2 | 2843001 thru 2843336 |
| -41 | 452-680 | BELT ASSY - Shoulder with inertia reel, black | 2 | 2843001 thru 2843336 |

-ITEM NOT ILLUSTRATED

When ordering, always specify Part Number, Description, and Serial Number of Aircraft

THIS PAGE INTENTIONALLY LEFT BLANK

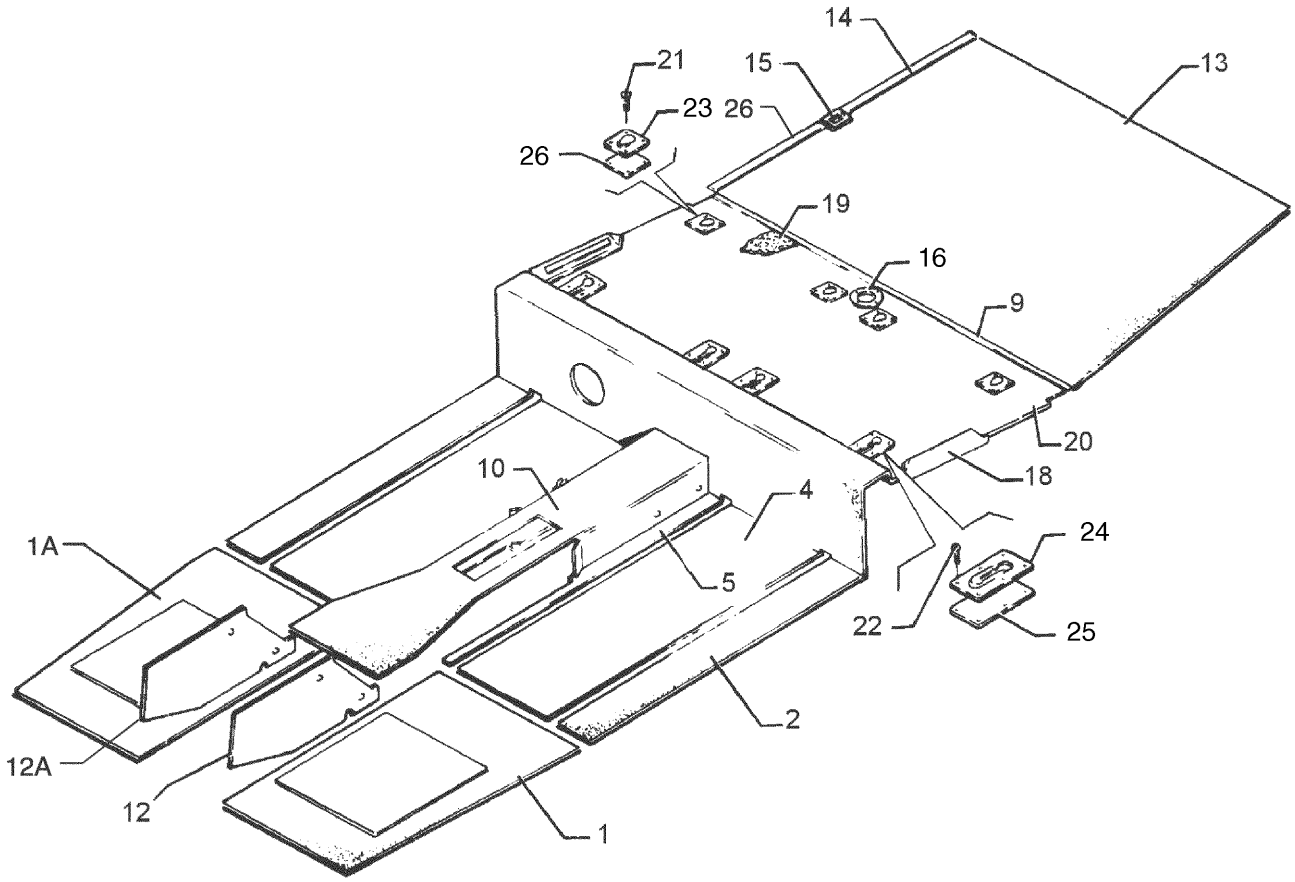


Figure 33. Carpet Installation

| Figure and Index Number | Part Number | Nomenclature | No. Req. | Serial Numbers Affected |
|---|---|---|---|---|
| 33- | 66801 (J) | DRAWING - Baggage Compartment Carpet Installation | | |
| | 84278 (AI) | DRAWING - Interior Installation | | |
| | 99119 (Z) | DRAWING - Floor Installation | | |
| 1 | 76161-018 | CARPET - Floor, front left | 1 | |
| 1A | 76161-019 | CARPET - Floor, front right | 1 | |
| 2 | 79236-016 | CARPET - Floor, sta. 74 to sta. 105, outboard (SEE NOTE 1) | 2 | |
| 4 | 79236-005 | CARPET - Floor, sta. 74 to sta. 105, center (SEE NOTE 1) | 2 | |
| 5 | 76199-012 | CARPET - Floor, sta. 74 to sta. 105, inboard, left (When ordering, specify color) | 1 | |
| -5A | 76199-013 | CARPET - Floor, sta. 74 to sta. 105, inboard, right (When ordering, specify color) | 1 | |
| 9 | 99143-000 | STRIP - Trim | 1 | |
| 10 | 76160-007 | CARPET ASSY - Tunnel, top (When ordering, specify color) | 1 | |
| -11 | 63900-023 | BUSHING | 4 | |
| 12 | 67904-012 | CARPET - Tunnel, side, left | 1 | |
| 12A | 67904-013 | CARPET - Tunnel, side, right | 1 | |
| 13 | 66802-011 | CARPET - Baggage compartment (When ordering, specify color) | 1 | |
| 14 | 63185-006 | TRIM STRIP - Baggage compartment | 1 | |
| 15 | 63293-002 | PLATE - Striker, baggage door, length 2.00'' | 1 | |
| -15A | 414-783 | SCREW - (MS24693-C51) | 2 | |
| 16 | 99240-000 | RING - Boot attachment | 1 | |
| -17 | 79828-012 | FLOOR ASSY | 1 | |
| 18 | 99252-010 | . COVER ASSY - Exhaust vent (When ordering, specify color) | 2 | |
| -18A | 79828-014 | . SCREEN ASSY | 2 | |
| -18B | 419-646 | . SCREW | 6 | |
| 19 | 35688-009 | . CARPET - Floor, rear and spar box (When ordering, specify color) | 1 | |
| 20 | 79828-003 | . PANEL - Floor | 1 | |
| 21 | 415-538 | . SCREW - (MS35206-248) | 16 | |
| -21A | 603-800 | . TEE NUT | 16 | |
| 22 | 415-538 | . SCREW - (MS35206-248) | 16 | |
| -22A | 603-800 | . TEE NUT | 24 | |
| -23 | 68094-003 | . PLATE - Trim, aft | 4 | |
| -24 | 99141-003 | . PLATE - Seat attachment, forward | 4 | |
| -25 | 99140-000 | . PLATE - Seat attachment, forward | 4 | |
| -26 | 79781-002 | . PLATE ASSY - Seat attachment, aft | 4 | |

NOTES:

1. USED IF SOUND REDUCTION CARPETING IS INSTALLED. WHEN ORDERING, SPECIFY COLOR.

-ITEM NOT ILLUSTRATED

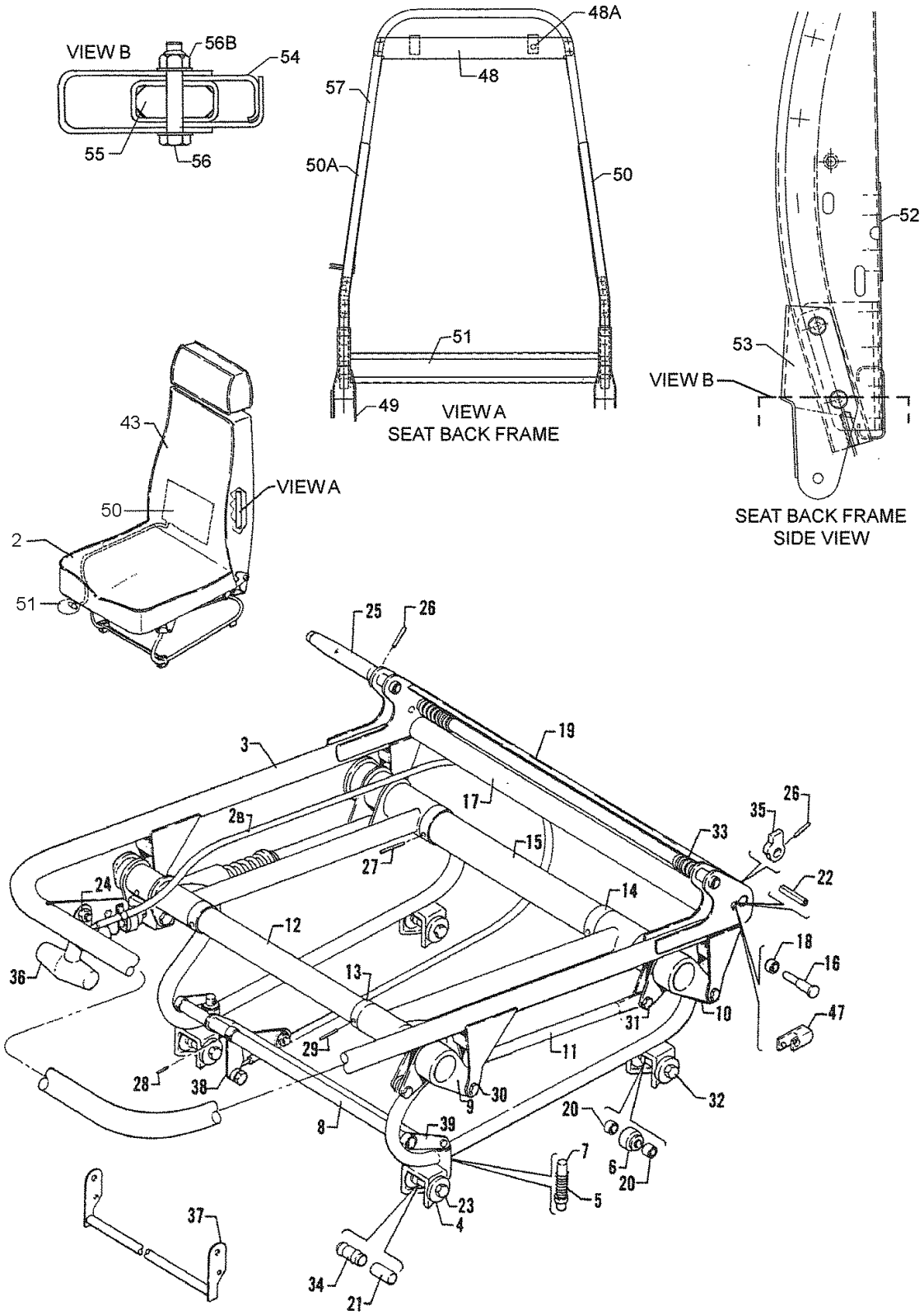


Figure 34. Vertically Adjustable Front Seat & Seat Back Frames

| Figure and Index Number | Part Number | Nomenclature | No. Req. | Serial Numbers Affected |
|---|---|---|---|---|
| 34- | 76170 (BB) | DRAWING - Seats Installation | | |
| | 02585 (F) | DRAWING - Lumbar Installation (Crew Seats) | | |
| -1 | 89026-002 | SEAT ASSY - Pilot, vertically adjustable | RF | |
| -1A | 89026-003 | SEAT ASSY - Co-pilot, vertically adjustable | RF | |
| 2 | 89026-006 | . BOTTOM ASSY - Seat, pilot | RF | |
| -2A | 89026-007 | . BOTTOM ASSY - Seat, co-pilot | RF | |
| 2B | 554-422 | . . CABLE ASSY - Seat track release (crew operated length 2”) | RF | |
| 3 | 79539-002 | . . FRAME ASSY - Seat bottom, pilot | 1 | |
| -3A | 79539-003 | . . FRAME ASSY - Seat bottom, co-pilot | 1 | |
| 4 | 62833-078 | . . . WASHER | 8 | |
| 5 | 587-299 | . . . SPRING - Seat plunger (LC-038F-6SS) | 2 | |
| 6 | 452-386 | . . . BEARING - (NAS506-4) | 2 | |
| 7 | 76175-000 | . . . PLUNGER | 2 | |
| 8 | 76172-003 | . . . TUBE - Bellcrank | 1 | |
| 9 | 76347-000 | . . . BELLCRANK ASSY - Forward | 1 | |
| 10 | 76349-000 | . . . BELLCRANK ASSY - Aft | 1 | |
| 11 | 76342-000 | . . . LINK ASSY - Seat | 1 | |
| 12 | 76343-000 | . . . TUBE ASSY - Forward | 1 | |
| 13 | 76351-002 | . . . BUSHING - Seat | 2 | |
| 14 | 76351-003 | . . . BUSHING - Seat | 2 | |
| 15 | 37848-002 | . . . TUBE ASSY - Aft | 1 | |
| 16 | 79229-000 | . . . BEARING SHAFT - Seat release, right | 1 | |
| 17 | 79230-000 | . . . TUBE - Seat reclining | 1 | |
| 18 | 79235-000 | . . . BUSHING - Seat back release, right | 1 | |
| 19 | 76176-000 | . . . COVER - Reclining seat | 1 | |
| 20 | 95061-161 | . . . SPACER - Seat | 4 | |
| 21 | 95061-106 | . . . SPACER | 2 | |
| 22 | 480-732 | . . . PIN - Roll (59-040-187-0937) | 2 | |
| 23 | 401-318 | . . . BOLT - (AN4-20A) | 2 | |
| -23A | 404-530 | . . . NUT - (MS21042-4) | 2 | |
| -23B | 477-708 | . . . NUT - (26C-048) | 2 | |
| -24 | 400-002 | . . . BOLT - (AN4-5A) | 1 | |
| -24A | 494-040 | . . . WASHER - Nylon | 1 | |
| -24B | 690-613 | . . . WASHER - (NAS1149F0432P) | 1 | |
| -24C | 404-530 | . . . NUT - (MS21042-4) | 1 | |
| -25 | 79442-000 | . . . HANDLE - Seat back adjustment | 1 | |
| 26 | 480-701 | . . . PIN - Roll (59-028-125-0625) | 3 | |
| 27 | 480-801 | . . . PIN - (MS9048-173) | 4 | |
| 28 | 480-777 | . . . PIN - (MS9048-100) | 3 | |
| 29 | 480-789 | . . . PIN - (MS9048-170) | 4 | |
| 30 | 424-172 | . . . PIN - (MS20392-2C11) | 4 | |
| -30A | 690-612 | . . . WASHER - (NAS1149FN363P) | 4 | |
| -30B | 424-051 | . . . COTTER PIN - (MS24665-132) | 4 | |
| 31 | 424-203 | . . . PIN - (MS20392-3C15) | 2 | |
| -31A | 690-613 | . . . WASHER - (NAS1149F0432P) | 2 | |
| -31B | 424-051 | . . . COTTER PIN - (MS24665-132) | 2 | |
| 32 | 401-318 | . . . BOLT - (AN4-20A) | 2 | |
| 33 | 19336-000 | . . . SPRING - Seat back adjustment, left | 1 | |
| -33A | 19336-001 | . . . SPRING - Seat back adjustment, right | 1 | |
| 34 | 87332-002 | . . . ROLLER - Seat | 2 | |
| 35 | 19365-002 | . . . CAM - Reclining seat | 2 | |
| 36 | 571-149 | . . . KNOB | 1 | |
| 37 | 79207-000 | . . . HANDLE ASSY - Seat release | 1 | |

-ITEM NOT ILLUSTRATED

When ordering, always specify Part Number, Description, and Serial Number of Aircraft

| Figure and Index Number | Part Number | Nomenclature | No. Req. | Serial Numbers Affected |
|---|---|---|---|---|
| 34- | | | | |
| -38 | 76187-000 | . . . ARM ASSY - Seat release | 1 | |
| 39 | 76178-000 | . . . ARM ASSY - Seat latch | 2 | |
| 43 | 89023-016 | . BACK ASSY - Seat, pilot | RF | |
| -43A | 89023-017 | . BACK ASSY - Seat, co-pilot | RF | |
| 45 | 79555-000 | . . FRAME ASSY - Seat back, pilot | 1 | |
| -45A | 79555-014 | . . FRAME ASSY- Seat back, co-pilot | 1 | |
| 48 | 79555-002 | . . . CHANNEL | 1 | |
| 48A | 506-557 | . . . NUT - (NAS 395-20-1) | 2 | |
| 49 | 79555-011 | . . . STOP (Co-pilot side only) | 1 | |
| 50 | 96819-000 | . . . SUPPORT - Seat back, left | 1 | |
| 50A | 96819-001 | . . . SUPPORT - Seat back, right | 1 | |
| 51 | 96817-000 | . . . BRACE - Seat back | 1 | |
| 52 | 89979-011 | . . . CLIP - Seat back | 2 | |
| 53 | 96809-002 | . . . HINGE ASSY | 2 | |
| 54 | 96820-000 | . . . SUPPORT - Seat back | 1 | |
| -54A | 96820-001 | . . . SUPPORT - Seat back | 1 | |
| 55 | 96812-002 | . . . PLUG | 2 | |
| 56 | 401-270 | . . . BOLT - (AN3-11A) | 4 | |
| -56A | 690-609 | . . . WASHER - (NAS1149F0332P) | 8 | |
| 56B | 404-526 | . . . NUT - (MS21042-3) | 4 | |
| 57 | 96830-001 | . . . TUBE | 1 | |
| 60 | 02585-004 | LUMBAR ASSY - Pilot seat | 1 | |
| -60A | 02585-005 | LUMBAR ASSY - Co-pilot seat | 1 | |
| -60B | 02585-006 | . PAD | 1 | |
| -60C | 686-207 | . BLADDER - (ILS3) | 1 | |
| 61 | 686-208 | PUMP BULB - (ILSHPB) | 1 | |
| -61A | 592-683 | VALVE - (ILSPBV) | 1 | |

-ITEM NOT ILLUSTRATED

When ordering, always specify Part Number, Description, and Serial Number of Aircraft

THIS PAGE INTENTIONALLY LEFT BLANK

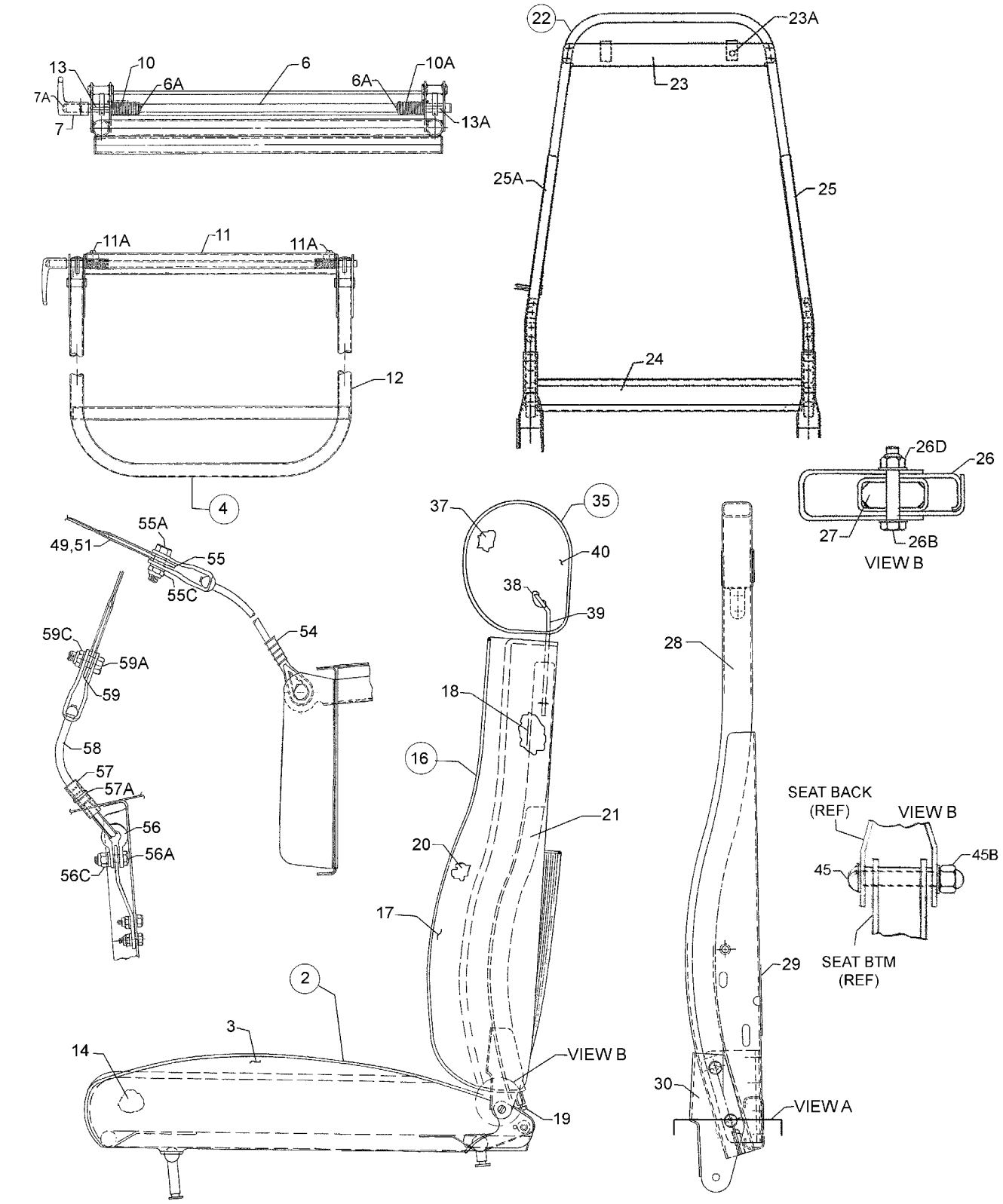


Figure 35. Rear Seats Installation

| Figure and Index Number | Part Number | Nomenclature | No. Req. | Serial Numbers Affected |
|---|---|---|---|---|
| 35- | 76170 (BB) | DRAWING - Seats Installation | | |
| | 79164 (U) | DRAWING - Shoulder Harness Installation | | |
| -1 | 89027-003 | SEAT ASSY - Rear, left (When ordering, specify color) | 1 | |
| -1A | 89027-002 | SEAT ASSY - Rear, right (When ordering, specify color) | 1 | |
| 2 | 89027-005 | . BOTTOM ASSY - Seat, left (When ordering, specify color) | 1 | |
| 2A | 89027-004 | . BOTTOM ASSY - Seat, right (When ordering, specify color) | 1 | |
| 3 | 89027-006 | . . COVER | 1 | |
| 4 | 99077-016 | . . FRAME ASSY, left | 1 | |
| -4A | 99077-017 | . . FRAME ASSY, right | 1 | |
| -5 | 99077-012 | . . . TUBE ASSY, left | 1 | |
| -5A | 99077-013 | . . . TUBE ASSY, right | 1 | |
| 6 | 26453-005 | . . . . TUBE ASSY | 1 | |
| 6A | 424-052 | . . . . COTTER PIN - (MS24665-134) | 2 | |
| 7 | 32380-000 | . . . . HANDLE | 1 | |
| 7A | 480-701 | . . . . ROLL PIN - (59-028-125-0625) | 1 | |
| 10 | 19336-000 | . . . SPRING | 1 | |
| 10A | 19336-001 | . . . SPRING | 1 | |
| 11 | 76176-000 | . . . RETAINER | 1 | |
| 11A | 419-474 | . . . SCREW - (AN530-4R4) | 4 | |
| 12 | 99075-000 | . . . FRAME ASSY | 1 | |
| 13 | 480-701 | . . . ROLL PIN - (59-028-125-0625) | 2 | |
| 13A | 480-732 | . . . ROLL PIN - (59-040-187-0937) | 2 | |
| 14 | 104903-002 | . . CUSHION | 1 | |
| 14 | 455-741 | . . CUSHION - (MF-990-04) | 1 | |
| 16 | 89023-010 | . BACK ASSY - Seat, left and right | 1 | |
| 17 | 89023-013 | . . COVER - Back Assy | 1 | |
| 18 | 78023-000 | . . BACKING | 1 | |
| 19 | 402-777 | . . BOLT - (NAS428-4A13) | 2 | |
| -19A | 79177-000 | . . NUT - Back adjustment | 2 | |
| 20 | 455-738 | . . CUSHION - (MF-9900-01) | 1 | |
| 20 | 104900-002 | . . CUSHION - (455-768) | 1 | |
| 21 | 79880-003 | . . PLATE | 1 | |
| 22 | 79555-000 | . . FRAME ASSY - Seat back | 1 | |
| 23 | 79555-002 | . . . CHANNEL | 1 | |
| 23A | 506-557 | . . . NUT - (NAS395-20-1) | 2 | |
| -24 | 96817-000 | . . . BRACE - Seat back | 1 | |
| -25 | 96819-000 | . . . SUPPORT - Seat back | 1 | |
| -25A | 96819-001 | . . . SUPPORT - Seat back | 1 | |
| -26 | 96820-000 | . . . SUPPORT - Seat back | 1 | |
| -26A | 96820-001 | . . . SUPPORT - Seat back | 1 | |
| -26B | 401-270 | . . . BOLT - (AN3-11A) | 4 | |
| -26C | 690-609 | . . . WASHER - (NAS1149F0332P) | 8 | |
| -26D | 404-526 | . . . NUT - (MS21042-3) | 4 | |
| 27 | 96812-002 | . . . PLUG | 2 | |
| 28 | 96830-001 | . . . TUBE - Seat back | 1 | |
| 29 | 96818-000 | . . . CLIP - Seat back | 2 | |
| 30 | 96809-002 | . . . HINGE ASSY | 2 | |
| 35 | 89028-002 | . HEADREST ASSY - (optional) | 1 | |
| -36 | 89028-003 | . . FILLER ASSY | 1 | |
| 37 | 455-751 | . . . CUSHION - (MF-9900-08) | 1 | |

-ITEM NOT ILLUSTRATED

When ordering, always specify Part Number, Description, and Serial Number of Aircraft

| Figure and Index Number | Part Number | Nomenclature | No. Req. | Serial Numbers Affected |
|---|---|---|---|---|
| 35- | | | | |
| 37 | 104906-002 | . . . CUSHION - (455-774) | 1 | |
| 38 | 99253-000 | . . . PLATE - Headrest | 1 | |
| -38 | 554-956 | . . . CLAMP | 2 | |
| -38 | 690-668 | . . . WASHER - (NAS1149FN432P) | 4 | |
| 39 | 99254-002 | . . . TUBE | 1 | |
| 40 | 89028-004 | . . COVER - Headrest | 1 | |
| 45 | 400-916 | . BOLT - (AN24-26A) | 2 | |
| -45 | 690-611 | . WASHER - (NAS1149F0463P) | 4 | |
| 45 | 477-708 | . NUT - (SPS-26C-048) | 4 | |
| 46 | 460-068 | . NUT - (PV3750157) (optional) | 2 | |
| -49 | 104211-013 | BELT ASSY - RH, Scroth (564-894) | 1 | 2843337 and up |
| 49 | 104211-012 | BELT ASSY - LH, Scroth (564-895) | 1 | 2843337 and up |
| -50 | 564-876 | BELT ASSY - Seat, adjustment end, outboard, black (Refer to Piper Service Bulletin 990 - latest revision) | 2 | 2843001 thru 2843336 |
| 51 | 564-879 | BELT ASSY - Seat, inboard, black (Refer to Piper Service Bulletin 990 - latest revision) | 2 | 2843001 thru 2843336 |
| -52 | 452-679 | BELT ASSY - Shoulder w/ inertia reel, black | 2 | 2843001 thru 2843336 |
| -53 | 68022-014 | BOOT - Seat belt attachment, black | 2 | |
| 54 | 96908-000 | CABLE ASSY - Safety belt attachment, rear side | 2 | |
| 55 | 63900-149 | BUSHING | 2 | |
| 55 | 401-187 | BOLT - (AN5-7A) | 2 | |
| -55 | 690-628 | WASHER - (NAS1149F0563P) | 2 | |
| 55 | 404-531 | NUT - (MS21042-5) | 2 | |
| 56 | 486-560 | SHACKLE - (MS20115-F5) | 2 | |
| 56 | 404-530 | NUT - (MS21042-4) | 2 | |
| 56 | 400-004 | BOLT - (AN4-7A) | 2 | |
| -56 | 690-611 | WASHER - (NAS1149F0463P) | 2 | |
| 57 | 63904-103 | SLEEVE | 2 | |
| 57 | 488-701 | TIE - (MS3367-7-9) | 2 | |
| 58 | 96908-000 | CABLE ASSY | 2 | |
| 59 | 404-531 | NUT - (MS21042-5) | 2 | |
| 59 | 63900-149 | BUSHING | 2 | |
| 59 | 401-187 | BOLT - (AN5-7A) | 2 | |
| -59 | 690-628 | WASHER - (NAS1149F0563P) | 2 | |

-ITEM NOT ILLUSTRATED

When ordering, always specify Part Number, Description, and Serial Number of Aircraft

THIS PAGE INTENTIONALLY LEFT BLANK

**GRIDS 1F22 THRU 1F24**
**INTENTIONALLY BLANK**

# SECTION VI
# INSTRUMENTS GROUP

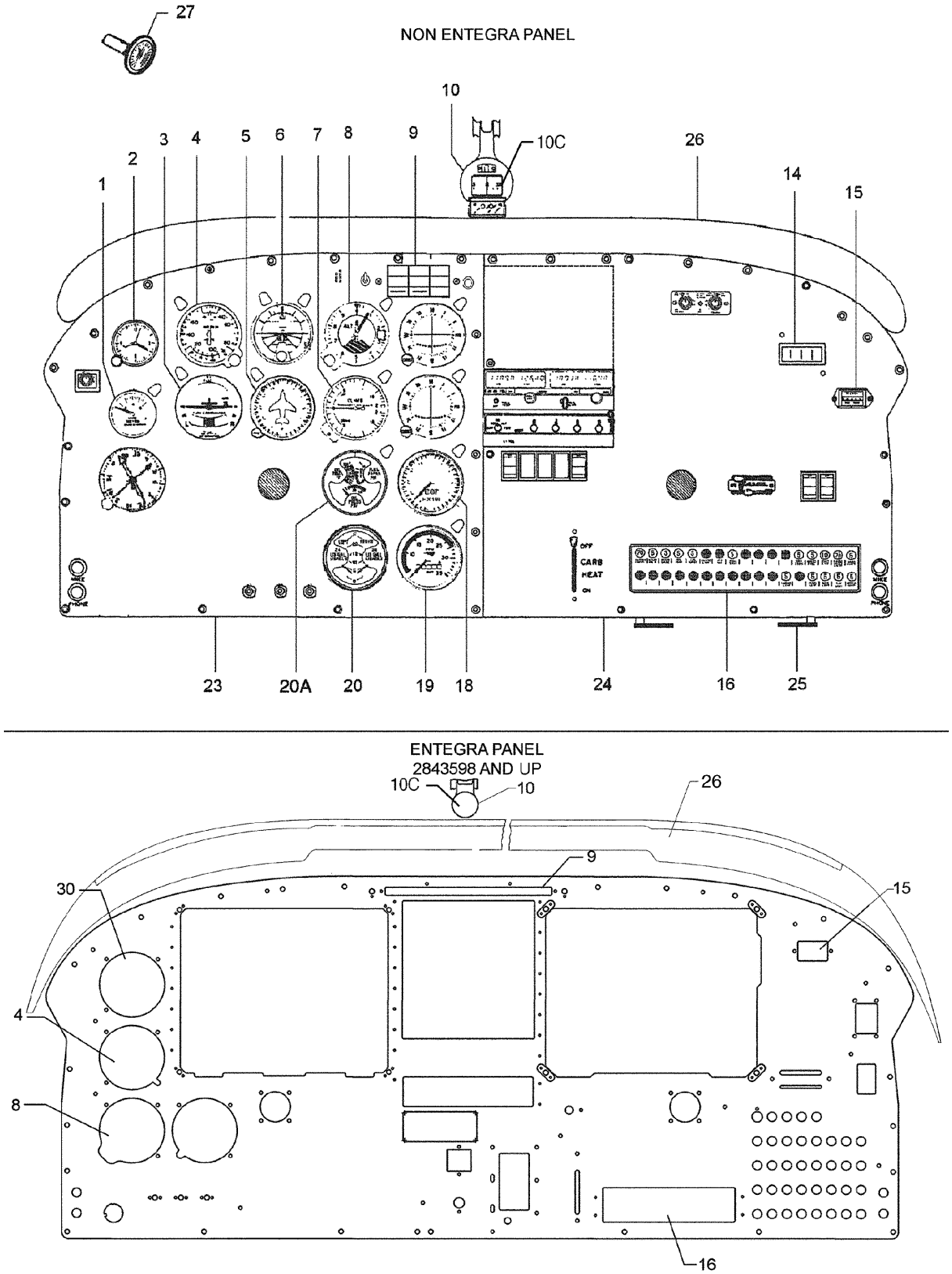


Figure 36. Instrument Panel Installation

| Figure and Index Number | Part Number | Nomenclature | No. Req. | Serial Numbers Affected |
|---|---|---|---|---|
| 36- | 85433 (K) | DRAWING - Instruments Installation | | |
| | 87347 (L) | DRAWING - Clock Instrument Installation | | |
| | 85476 (A) | DRAWING - Outside Air Temperature Indicator Installation (Without Entegra) | | |
| | 85518 (A) | DRAWING - Dual Altimeter Installation (Without Entegra) | | |
| | 101276 (C) | DRAWING - Avionics Locator (Without Entegra) | | |
| | 85370 (AF) | DRAWING - Electrical System Installation (Without Entegra) | | |
| | 101910 (S) | DRAWING - Electrical System Installation (With Entegra) | | 2843598 and up |
| | 84278 (AI) | DRAWING - Interior Installation | | |
| 1 | 99480-003 | INDICATOR - Vacuum gauge (599-537)(Non Entegra) | 1 | |
| -1A | 515-709 | SCREW (Non Entegra) | 4 | |
| -1B | 690-640 | WASHER - (NAS1149FN632P) (Non Entegra) | 4 | |
| -1C | 404-528 | NUT - (MS21042-06) (Non Entegra) | 4 | |
| 2 | 548-868 | INDICATOR - Clock (Non Entegra) | 1 | |
| -2A | 415-497 | SCREW - (MS35206-232) (Non Entegra) | 2 | |
| -2B | 408-105 | WASHER - (MS35335-31) (Non Entegra) | 1 | |
| 3 | 548-190 | INDICATOR - Turn and bank (Non Entegra) | 1 | |
| -3A | 515-715 | SCREW (Non Entegra) | 4 | |
| -3B | 406-346 | NUT - (A1181-6Z1D) (Non Entegra) | 4 | |
| 4 | 599-562 | INDICATOR - Airspeed | 1 | 2843001 thru 2843597 |
| 4 | 602-418 | INDICATOR - Airspeed | 4 | 2843598 and up |
| -4A | 520-009 | SCREW | 4 | |
| 5 | 548-435 | INDICATOR - Directional gyro (Non Entegra) | 1 | |
| -5A | 520-009 | SCREW (Non Entegra) | 3 | |
| 6 | 99002-009 | INDICATOR - Gyro horizon (Non Entegra) | 1 | |
| -6A | 515-712 | SCREW (Non Entegra) | 4 | |
| 7 | 550-556 | INDICATOR - Rate of climb (Non Entegra) | 1 | |
| -7A | 520-009 | SCREW (Non Entegra) | 8 | |
| 8 | 599-549 | INDICATOR - Altimeter | 1 | |
| -8A | 599-549 | INDICATOR - Altimeter (Dual altimeter, optional) (Non Entegra) | 1 | |
| -8B | 520-009 | SCREW | 3 | |
| 9 | 85372-003 | PANEL ASSY - Annunciator (Non Entegra) (SEE NOTE 1) | RF | |
| 9 | 85372-005 | PANEL ASSY - Annunciator (Entegra) (SEE NOTE 1) | RF | 2843598 and up |
| 10 | 67462-008 | INDICATOR - Compass assy | 1 | |
| -10A | 598-599 | . INDICATOR - Compass | 1 | |
| -10B | 79650-002 | . HOLDER - Compass card | 1 | |
| 10C | 79600-000 | COMPASS ASSY | 1 | |
| 14 | 548-885 | INDICATOR - Ammeter (Non Entegra) | 1 | |
| 15 | 51006-000 | INDICATOR - Engine hour meter (550-580) | 1 | |
| -15A | 515-709 | SCREW - Hour Meter | 2 | |
| -15B | 407-041 | WASHER - (MS35338-41) | 2 | |
| -15C | 405-406 | NUT - (MS25082-1) | 2 | |
| 16 | 85375-003 | PANEL ASSY - Circuit breaker (Non Entegra) (SEE NOTE 1) | RF | |
| 16 | 101906-003 | PANEL ASSY - Circuit breaker (Entegra) | RF | 2843598 and up |
| 18 | 599-543 | INDICATOR - Exhaust gas temperature (Non Entegra) | 1 | |
| 19 | 599-282 | INDICATOR - Tachometer (Non Entegra) | 1 | |
| -19A | 520-009 | SCREW (Non Entegra) | 4 | |
| 20 | 599-551 | INDICATOR - Dual fuel quantity gauge (Non Entegra) | 1 | |
| 20A | 599-552 | INDICATOR - Engine gauge (oil temperature, oil pressure, fuel pressure) (Non Entegra) | 1 | |
| -20B | 520-009 | SCREW (Non Entegra) | 8 | |
| -20C | 690-640 | WASHER - (NAS1149FN632P) (Non Entegra) | 8 | |

-ITEM NOT ILLUSTRATED

When ordering, always specify Part Number, Description, and Serial Number of Aircraft

| Figure and Index Number | Part Number | Nomenclature | No. Req. | Serial Numbers Affected |
|---|---|---|---|---|
| 36- | | | | |
| -20D | 404-528 | NUT - (MS21042-06) (Non Entegra) | 8 | |
| 21 | DELETED | | | |
| 22 | DELETED | | | |
| 23 | 101271-005 | PANEL - Instrument, left (Non Entegra) | 1 | |
| -24 | 101271-008 | PANEL - Instrument, right (IFR) (Non Entegra) | 1 | |
| -25 | 87451-004 | HOLDER - Crew cup, right (optional equipment) (Non Entegra) | 1 | |
| -25A | 87451-005 | HOLDER - Crew cup, left (optional equipment) (Non Entegra) | 1 | |
| -25B | 411-531 | SCREW - (MS35207-262) (Non Entegra) | 2 | |
| -25C | 87466-002 | SPACER (Non Entegra) | 2 | |
| -25D | 408-836 | WASHER - Spring (Non Entegra) | 2 | |
| 26 | 89305-023 | GLARESHIELD ASSY (Non Entegra) | 1 | |
| 26 | 89305-027 | GLARESHIELD ASSY (Entegra) | 1 | 2843598 and up |
| 27 | 87702-007 | INDICATOR ASSY - Outside air temperature (Non Entegra) | 1 | |
| -27A | 83932-007 | BRACKET ASSY - Outside air temperature indicator (Non Entegra) | 1 | |
| 28 | DELETED | | | |
| 29 | DELETED | | | |
| 30 | 602-319 | INDICATOR - Standby Attitude (Entegra) | 1 | 2843598 and up |

NOTES:

1. SEE FIGURE 60, INSTRUMENT PANEL ELECTRICAL INSTALLATION. ALSO SEE FIGURE 61, OVERHEAD SWITCH PANEL.

-ITEM NOT ILLUSTRATED

THIS PAGE INTENTIONALLY LEFT BLANK

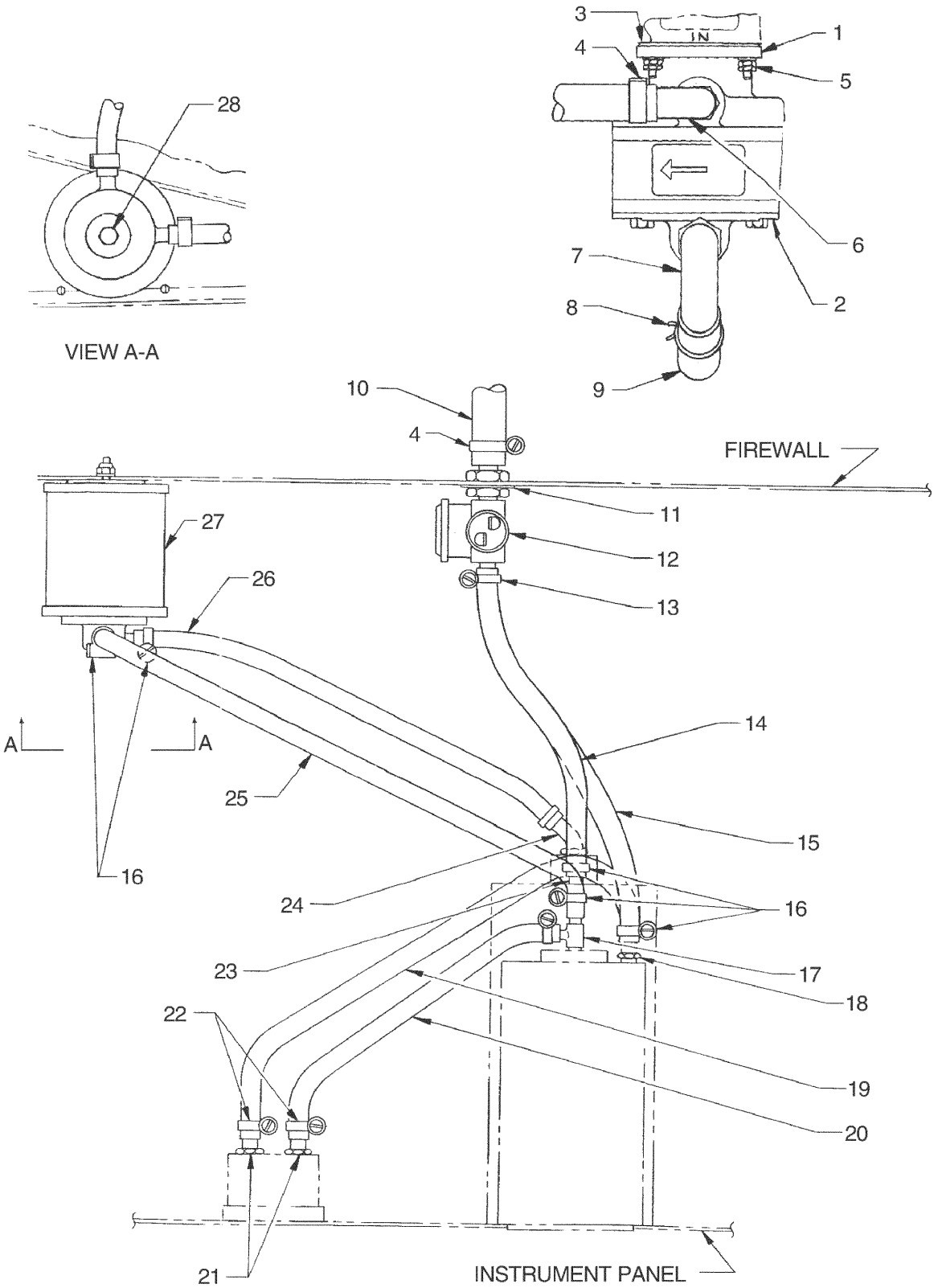


Figure 37. Vacuum System Installation

| Figure and Index Number | Part Number | Nomenclature | No. Req. | Serial Numbers Affected |
|---|---|---|---|---|
| 37- | 85434 (E) | DRAWING - Vacuum System Installation | | |
| 1 | 69439-000 | COVER - Intertia reel | 1 | |
| 2 | 79399-003 | PUMP - Dry vacuum | 1 | 2843001 thru 2843529 |
| 2 | 79399-005 | PUMP - Dry vacuum | 1 | 2843530 and up |
| 3 | 461-907 | GASKET - Vacuum pump mounting - (8313) | 1 | |
| 4 | 554-552 | CLAMP | 2 | |
| 5 | 405-580 | NUT - (Supplied as part of Vacuum Pump Drive Kit) | 4 | |
| -5A | 690-611 | WASHER - (NAS1149F0463P) (Supplied as part of Vacuum Pump Drive Kit) | 4 | |
| -5B | 477-850 | NUT - (MS27151-12) | 4 | |
| 6 | 458-958 | ELBOW - (1K1-6-10) | 1 | |
| 7 | 558-900 | ELBOW - (1K8-6-8) | 1 | |
| 8 | 554-985 | CLAMP | 1 | |
| 9 | 63904-029 | HOSE - Vacuum pump exhaust | 1 | |
| 10 | 63913-081 | HOSE - Regulating valve to vacuum pump | 1 | |
| 11 | 690-615 | WASHER - (NAS1149FI432P) | 1 | |
| 12 | 492-240 | VALVE - Vacuum regulating | 1 | |
| 13 | 554-678 | CLAMP - Upper | 1 | |
| -13A | 566-406 | CLAMP - Lower | 1 | |
| 14 | 63913-007 | HOSE - Directional gyro to regulating valve | 1 | |
| 15 | 63913-055 | HOSE - Attitude gyro to regulating valve | 1 | |
| 16 | 554-678 | CLAMP | 5 | |
| 17 | 560-835 | FITTING | 1 | |
| 18 | 451-881 | FITTING - Lower | 1 | |
| -18A | 451-939 | ADAPTER - Upper | 1 | |
| 19 | 84013-026 | HOSE - Vacuum source | 1 | |
| 20 | 84013-028 | HOSE - Vent | 1 | |
| 21 | 451-881 | FITTING (SEE NOTE 1) | 2 | |
| 22 | 654-096 | CLAMP | 4 | |
| 23 | 451-939 | ADAPTER | 1 | |
| -24 | 558-913 | ELBOW | 1 | |
| -24A | 566-406 | CLAMP | 1 | |
| -25 | 63913-007 | HOSE - Attitude gyro to air filter | 1 | |
| 26 | 63913-044 | HOSE - Directional gyro to air filter | 1 | |
| 27 | 66673-000 | FILTER ASSY - Air (460-888) | 1 | |
| -27A | 757-899 | . CARTRIDGE - Air filter (Refer to Piper Service Bulletin #1041 - latest revision) | 1 | |
| 28 | 63900-145 | SPACER | 1 | |
| -28A | 690-612 | WASHER - (NAS1149F0363P) | 1 | |
| -28B | 404-526 | NUT - (MS21042-3) | 1 | |
| -29 | 189-780 | KOROSEAL | 1 | |

NOTES:

1. THESE FITTINGS ARE USED ONLY WHEN SUCTION GAUGE IS SUPPLIED WITHOUT FITTINGS.

-ITEM NOT ILLUSTRATED

When ordering, always specify Part Number, Description, and Serial Number of Aircraft

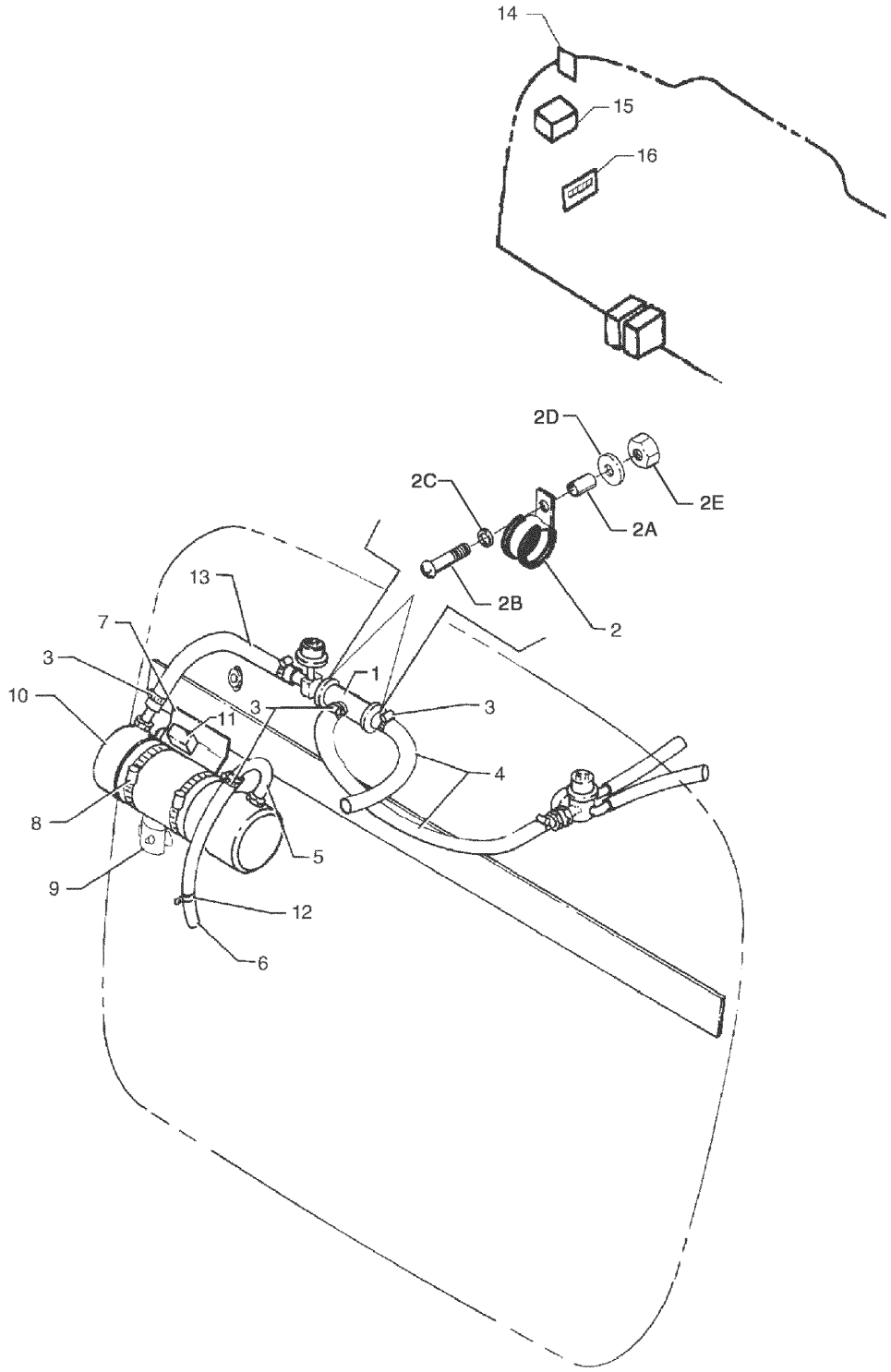


Figure 38. Auxiliary Vacuum System Installation

| Figure and Index Number | Part Number | Nomenclature | No. Req. | Serial Numbers Affected |
|---|---|---|---|---|
| 38 | 85387 (G) | DRAWING - Auxiliary Vacuum Pump Installation | | 2843001 thru 2843202 |
| | 101292 (B) | DRAWING - Auxiliary Vacuum Pump Installation | | 2843203 and up |
| 1 | 761-821 | MANIFOLD - (Part of Kit 566-524) (Part of Kit 481-881) | 1 | |
| 2 | 454-977 | CLAMP | 2 | |
| 2A | 82695-024 | SPACER | 2 | |
| 2B | 411-536 | SCREW - (MS35207-267) | 2 | |
| 2C | 690-612 | WASHER - (NAS1149F0363P) | 2 | |
| 2D | 407-800 | WASHER - (AN970-3) | 2 | |
| 2E | 404-526 | NUT - (MS21042-3) | 2 | |
| 3 | 554-793 | CLAMP | 6 | |
| 4 | 84013-084 | HOSE | 2 | |
| 5 | 558-900 | ELBOW - (Part of Kit 566-524) (Part of Kit 481-881) | 1 | |
| 6 | 84013-087 | HOSE | 1 | |
| 7 | 85491-002 | BRACKET ASSY | 1 | |
| 8 | 654-001 | CLAMP | 2 | |
| 9 | 762-681 | RELAY - (Part of Kit 481-881) | 1 | |
| 10 | 765-648 | PUMP ASSY - Auxiliary (SEE NOTE 1) | 1 | |
| -10A | 87772-007 | BRACKET ASSY - Pump Mount | 1 | 2843001 thru 2843556 |
| 11 | 754-895 | FILTER ASSY - EMI (Part of Kit 566-524) (Part of Kit 481-881) | 1 | |
| 12 | 454-868 | CLAMP | 1 | |
| -12A | 411-532 | SCREW - (MS35207-263) | 1 | |
| -12B | 690-609 | WASHER - (NAS1149F0332P) | 1 | |
| 13 | 84013-082 | HOSE | 1 | |
| 14 | 765-553 | PLACARD - Caution reduce amp load (See Figure 72) (Part of Kit 566-524) (Part of Kit 481-881) | RF | |
| 15 | 87777-008 | SWITCH ASSY | 1 | 2843001 thru 2843008 |
| -15A | 87777-045 | SWITCH ASSY | 1 | 2843009 thru 2843202 |
| -15B | 101291-003 | HARNESS ASSY - Switch | 1 | 2843203 and up |
| 16 | 765-019 | ETI ASSY - (Part of Kit 481-881) | 1 | |
| -19 | 68770-012 | GROMMET | 2 | |
| -20 | 68771-010 | GASKET | 1 | |

NOTES:

1. PART OF KIT 481-881. REFERENCE PIPER SERVICE BULLETIN #1026 - LATEST REVISION. SPECIFY SERIAL NUMBER WHEN ORDERING. ITEM 10A MUST ACCOMPANY THIS PUMP ASSY FOR THE SERIAL NUMBERS SPECIFIED BELOW. SEE ITEM 10A.

-ITEM NOT ILLUSTRATED

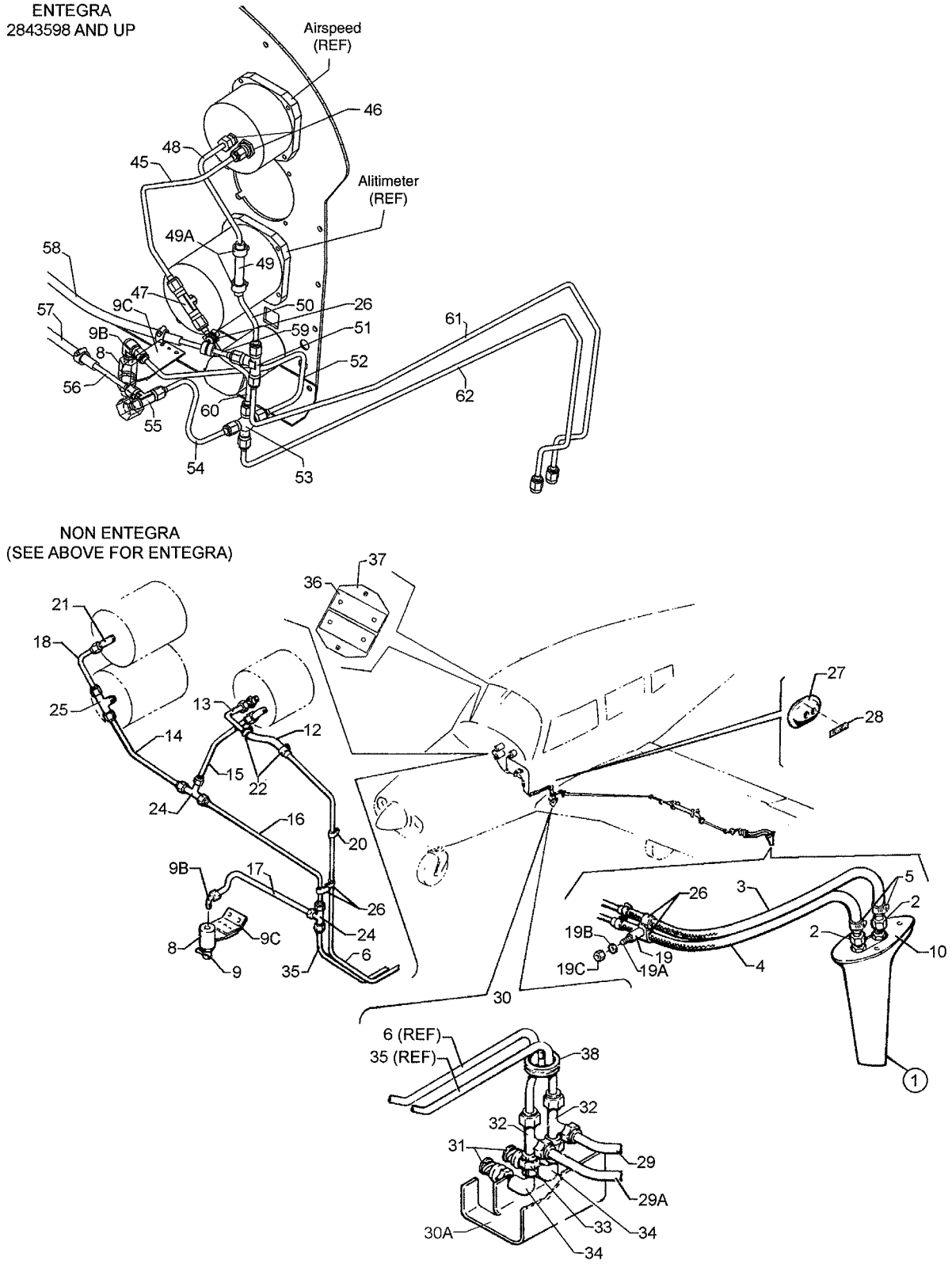


Figure 39. Pitot Static System Installation

| Figure and Index Number | Part Number | Nomenclature | No. Req. | Serial Numbers Affected |
|---|---|---|---|---|
| 39- | 35493 (CB) | DRAWING - Pitot Static System Installation | | |
| 1 | 96392-012 | HEAD ASSY - Pitot (heated) (Entegra) | 1 | 2843598 and up |
| 1 | 96392-010 | HEAD ASSY - Pitot (heated) (Non Entegra) | 1 | |
| 2 | 556-105 | . CONNECTOR | 2 | |
| 3 | 63913-123 | HOSE - Pitot, pressure | 1 | |
| 4 | 63913-122 | HOSE - Pitot, static | 1 | |
| 5 | 488-722 | CLAMP | 2 | |
| 6 | 67700-300 | TUBE ASSY - Pitot pressure (Non Entegra) | 1 | |
| 8 | 96143-011 | VALVE ASSY - Static air vent | 1 | |
| 9 | 492-100 | . VALVE - (CCA-7450) | 1 | |
| -9A | 406-367 | . NUT - (A8177-6Z-3) | 1 | |
| 9B | 558-807 | . ELBOW - (MS20822-3D) | 1 | |
| 9C | 96143-010 | . BRACKET ASSY | 1 | |
| 10 | 69042-000 | GASKET - Pitot head | 1 | |
| -10A | 415-514 | SCREW - (MS35206-234) | 3 | |
| 12 | 63913-106 | HOSE - Pitot pressure (Non Entegra) | 1 | |
| 13 | 63207-000 | TUBE - Pitot (Non Entegra) | 1 | |
| 14 | 83744-144 | TUBE ASSY - Pitot static (Non Entegra) | 1 | |
| 15 | 83744-143 | TUBE ASSY - Pitot static (Non Entegra) | 1 | |
| 16 | 67700-422 | TUBE ASSY - Pitot static (Non Entegra) | 1 | |
| 17 | 67700-172 | TUBE ASSY - Pitot static (Non Entegra) | 1 | |
| 18 | 95153-101 | TUBE ASSY - Pitot static (Non Entegra) | 1 | |
| 18 | 95153-158 | TUBE ASSY - Pitot static (Non Entegra) (Used if encoding altimeter is installed) | 1 | |
| 19 | 63900-025 | BUSHING | 1 | |
| 19A | 411-533 | SCREW - (MS35207-264) | 1 | |
| 19B | 690-609 | WASHER - (NAS1149F0332P) | 1 | |
| 19C | 404-526 | NUT - (MS21042-3) | 1 | |
| 20 | 554-953 | CLAMP - (Non Entegra) | 1 | |
| -20A | 411-533 | SCREW - (MS35207-264) (Non Entegra) | 1 | |
| -20B | 690-609 | WASHER - (NAS1149F0332P) (Non Entegra) | 1 | |
| -20C | 404-526 | NUT - (MS21042-3) (Non Entegra) | 1 | |
| 22 | 554-575 | CLAMP - (Non Entegra) | 6 | |
| -24 | 488-315 | TEE - (AN824-3D) (Non Entegra) | 2 | |
| -25 | 691-218 | TEE - (MS20825-3D) (Non Entegra) | 1 | |
| -25 | 491-059 | UNION - (AN832-3D) (Non Entegra) | 1 | |
| -26 | 454-928 | CLAMP | 6 | |
| 27 | 35507-002 | COVER ASSY - Pitot static drain (When ordering, specify color) | 1 | |
| 28 | 67768-002 | PLACARD - Pitot drain (See Figure 72) (Non Entegra) | RF | |
| 29 | 67700-403 | TUBE ASSY - Pitot pressure | 1 | |
| 29A | 67700-185 | TUBE ASSY - Pitot static | 1 | |
| 30 | 37994-002 | SUMP ASSY - Pitot static | 1 | |
| 30A | 37994-004 | . BRACKET | 1 | |
| 31 | 492-241 | . VALVE | 2 | |
| 32 | 691-225 | . TEE - (MS20826-3D) | 2 | |
| 33 | 455-173 | . COUPLING - (AN910-1D) | 2 | |
| 34 | 35696-002 | . ELBOW - Pitot static | 2 | |
| -34A | 463-390 | . GROMMET - (1659) | 2 | |
| 35 | 67700-301 | TUBE ASSY - Pitot static (Non Entegra) | 1 | |
| 36 | 85378-002 | SENSOR ASSY - Pitot heat | 1 | 2843001 thru 2843009 |
| 36A | 85378-003 | SENSOR ASSY - Pitot heat (Non Entegra) | 1 | 2843010 and up |
| 37 | 85377-002 | . BRACKET - Pitot heat sensor assy | 1 | |
| -37A | 415-505 | . SCREW - (MS24693-S23) | 4 | |

-ITEM NOT ILLUSTRATED

When ordering, always specify Part Number, Description, and Serial Number of Aircraft

| Figure and Index Number | Part Number | Nomenclature | No. Req. | Serial Numbers Affected |
|---|---|---|---|---|
| 39- | | | | |
| -37B | 85376-002 | . WIRING ASSY - (Non Entegra) | 1 | 2843001 thru 2843009 |
| -37B | 85376-003 | . WIRING ASSY - (Non Entegra) | 1 | 2843010 and up |
| 38 | 63976-041 | GROMMET | 1 | |
| 45 | 102641-118 | TUBE ASSY - Static (Entegra) | 1 | 2843598 and up |
| 46 | 476-647 | NIPPLE - (AN816-3D) (Entegra) | 2 | 2843598 and up |
| 47 | 691-218 | TEE - (MS20825-3D) (Entegra) | 1 | 2843598 and up |
| 48 | 102641-119 | TUBE ASSY - Pitot (Entegra) | 1 | 2843598 and up |
| 49 | 63913-172 | HOSE - Pitot (Entegra) | 1 | 2843598 and up |
| 49A | 554-575 | CLAMP - (Entegra) | 4 | 2843598 and up |
| 50 | 83744-267 | TUBE ASSY - Pitot (Entegra) | 1 | 2843598 and up |
| 51 | 488-315 | TEE - (AN824-3D) (Entegra) | 1 | 2843598 and up |
| 52 | 83744-274 | TUBE ASSY - Static (Entegra) | 1 | 2843598 and up |
| 53 | 455-417 | CROSS - (AN827-3D) (Entegra) | 1 | 2843598 and up |
| 54 | 83744-275 | TUBE ASSY - Static (Entegra) | 1 | 2843598 and up |
| 55 | 691-225 | TEE - (MS20826-3D) (Entegra) | 1 | 2843598 and up |
| 56 | 83744-270 | TUBE ASSY - Static (Entegra) | 1 | 2843598 and up |
| 57 | 63913-152 | HOSE - Static (Entegra) | 1 | 2843598 and up |
| -57A | 602-828 | CONNECTOR - (PCM1703) (Entegra) | 1 | 2843598 and up |
| 58 | 63913-115 | HOSE - Pitot (Entegra) | 1 | 2843598 and up |
| -58A | 602-828 | CONNECTOR - (PCM1703) (Entegra) | 1 | 2843598 and up |
| 59 | 83744-270 | TUBE ASSY - Pitot (Entegra) | 1 | 2843598 and up |
| 60 | 83744-265 | TUBE ASSY - Static (Entegra) | 1 | 2843598 and up |
| 61 | 83744-272 | TUBE ASSY - Pitot (Entegra) | 1 | 2843598 and up |
| 62 | 83744-273 | TUBE ASSY - Static (Entegra) | 1 | 2843598 and up |

-ITEM NOT ILLUSTRATED

THIS PAGE INTENTIONALLY LEFT BLANK

THIS PAGE INTENTIONALLY LEFT BLANK

# SECTION VII
# POWER PLANT GROUP

Reissued: December 10, 2006



Island Enterprises

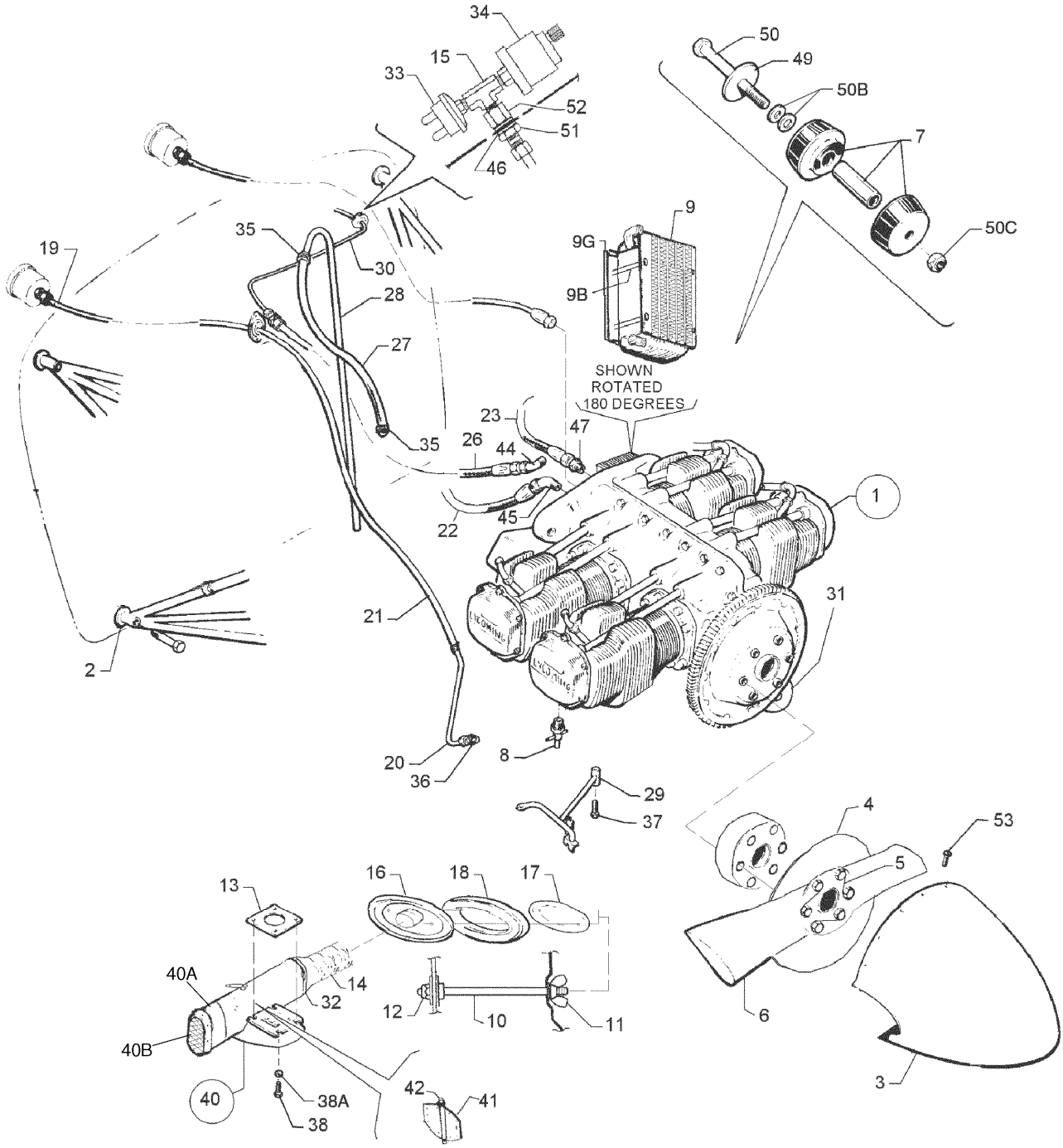


Figure 40. Power Plant Installation

| Figure and Index Number | Part Number | Nomenclature | No. Req. | Serial Numbers Affected |
|---|---|---|---|---|
| 40- | 85472 (AN) | DRAWING - Power Plant Installation | | |
| | 79108 (AC) | DRAWING - Nose Landing Gear Installation | | |
| 1 | 680-483 | ENGINE - Lycoming (0-360-A4M)(ENPL RT10386) (SEE NOTE 1) | 1 | |
| 2 | 66662-015 | MOUNT ASSY - Engine and nose gear strut | 1 | |
| 3 | 83349-012 | SPINNER ASSY - Propeller, polished (Item not available. Order components) | 1 | |
| 4 | 83349-004 | . BULKHEAD ASSY - Spinner, rear, painted | 1 | |
| -4A | 83349-014 | . BULKHEAD ASSY - Spinner, front (Refer to Piper Service Bulletin #992 - latest revision) | 1 | |
| -4B | 83349-015 | . SPINNER - Propeller, polished (Refer to Piper Service Bulletin #992 - latest revision) | 1 | |
| 5 | 151-300 | SAFETY WIRE | AR | |
| 6 | 551-038 | PROPELLER ASSY - Sensenich (76EM8S14-0-62) | 1 | |
| -6A | 583-410 | DECAL - (Optional) | 2 | |
| 7 | 475-124 | MOUNT - Engine (J9613-40) | 4 | |
| 8 | 61879-002 | VALVE ASSY - Oil drain | 1 | |
| 9 | 85472-012 | OIL COOLER Refer to Piper Service Bulletin #1019 - latest revision) | 1 | |
| -9A | 85472-010 | OIL COOLER Refer to Piper Service Bulletin #1019 - latest revision) | 1 | |
| 9B | 400-464 | BOLT - (AN3-41A) | 4 | |
| -9C | 86062-094 | SPACER | 4 | |
| -9D | 690-612 | WASHER - (NAS1149FN363P) | 8 | |
| -9E | 690-609 | WASHER - (NAS1149F0332P) Install at ends of spacers | 8 | |
| -9F | 404-526 | NUT - (MS21042-3) | 4 | |
| 9G | 35448-000 | SEAL ASSY - Oil cooler | 1 | |
| 10 | 38019-003 | STUD | 2 | |
| 11 | 477-668 | WING NUT | 2 | |
| -11A | 690-609 | WASHER - (NAS1149F0332P) | 2 | |
| -11B | 407-043 | LOCK WASHER - (AN935-10) | 2 | |
| 12 | 407-800 | WASHER - (AN970-3) | 4 | |
| -12A | 404-526 | NUT - (MS21042-3) | 2 | |
| -12B | 404-224 | NUT - (AN315-3R) | 2 | |
| 13 | 63684-004 | GASKET - Carburetor air box | 1 | |
| 14 | 85479-003 | DUCT (Refer to Piper Service Letter #1028A - latest revision) | 1 | |
| -14A | 555-846 | CLAMP | 1 | |
| 15 | 588-469 | TEE | 1 | |
| 16 | 85490-002 | COVER ASSY - Air filter | 1 | |
| -16A | 411-532 | SCREW - (MS35207-263) | 6 | |
| -16B | 690-609 | WASHER - (NAS1149F0332P) | 6 | |
| 17 | 38019-005 | CAP - Air filter | 1 | |
| 18 | 460-632 | AIR FILTER (Refer to Piper Service Letter #1022 - latest revision) | 1 | |
| -18A | 89308-000 | AIR FILTER | 1 | |
| 19 | 67700-029 | TUBE ASSY - Manifold pressure gauge | 1 | |
| 20 | 62992-000 | TUBE ASSY - Manifold pressure | 1 | |
| 21 | 63913-026 | HOSE - Flexible, manifold pressure | 1 | |
| 22 | 39995-052 | HOSE ASSY - Engine oil pump to cooler (566-307) | 1 | |
| -23 | 39995-052 | HOSE ASSY - Oil cooler to engine (566-307) | 1 | |
| -23A | 189-549 | SLEEVING - 8” strip (Refer to Piper Service Bulletin #1066 - Latest Revision) | 1 | |
| -26 | 63901-027 | HOSE ASSY - Oil pressure | 1 | |

-ITEM NOT ILLUSTRATED

When ordering, always specify Part Number, Description, and Serial Number of Aircraft

| Figure and Index Number | Part Number | Nomenclature | No. Req. | Serial Numbers Affected |
|---|---|---|---|---|
| 40- | | | | |
| -26A | 454-935 | CLAMP | 3 | |
| -26B | 454-929 | CLAMP | 1 | |
| -26C | 411-532 | SCREW - (MS35207-263) | 2 | |
| -26D | 404-526 | NUT - (MS21042-3) | 2 | |
| 27 | 63913-209 | HOSE - Engine breather | 1 | |
| 28 | 62980-002 | TUBE - Engine breather | 1 | |
| -28A | 454-976 | CLAMP | 1 | |
| -28B | 415-493 | SCREW - (MS35206-228) | 1 | |
| -28C | 404-528 | NUT - (MS21042-06) | 1 | |
| 29 | 69317-000 | SUPPORT ASSY - Engine controls | 1 | |
| 30 | 67700-088 | TUBE ASSY - Oil pressure | 1 | |
| -30A | 454-929 | CLAMP | 1 | |
| -30B | 415-535 | SCREW - (MS35206-245) | 1 | |
| -30C | 690-616 | WASHER - (NAS1149FN832P) | 1 | |
| 31 | 680-500 | ALTERNATOR | 1 | |
| | | (SEE NOTE 2) | | |
| -31A | 63633-198 | HOSE - Alternator Cooling | 1 | |
| 32 | 654-103 | CLAMP | 1 | |
| 33 | 85342-002 | SWITCH - Oil pressure | 1 | |
| 34 | 548-729 | SENDER - Oil pressure | 1 | |
| 35 | 454-837 | CLAMP | 2 | |
| 36 | 460-685 | CONNECTOR | 1 | |
| 37 | 486-274 | SCREW - Cap (MS90725-15) | 1 | |
| -37A | 404-005 | NUT | 2 | |
| -37B | 603-318 | NUT - (27FAF518) | 2 | |
| 38 | 401-919 | BOLT - (MS20074A-04-04) | 4 | |
| 38A | 690-611 | WASHER - (NAS1149F0463P) | 4 | |
| 40 | 85474-019 | BOX ASSY - Induction air | 1 | 2843001 thru 2843499 |
| | | (Refer to Piper Service Bulletin 1104 & 1024 - latest revision) | | |
| 40 | 104606-002 | AIRBOX ASSY | 1 | 2843500 and up |
| | | (Refer to Piper Service Bulletin 1104 - latest revision) | | |
| 40A | 85489-010 | . SHROUD ASSY | 1 | 2843001 thru 2843499 |
| 40A | 104606-006 | . SHROUD ASSY | 1 | 2843500 and up |
| 40B | 85489-011 | . . SCREEN | 1 | 2843001 thru 2843499 |
| | | (Refer to Piper Service Letter #1028A - latest revision) | | |
| 40B | 104606-021 | . . SCREEN | 1 | 2843500 and up |
| 41 | 62999-003 | . VALVE ASSY - Carburetor air box | 1 | 2843001 thru 2843499 |
| 41 | 104607-002 | . VALVE ASSY | 1 | 2843500 and up |
| 42 | 104608-002 | . SHAFT ASSY | 1 | 2843500 and up |
| 42 | 62998-000 | . SHAFT ASSY - Carburetor air box | 1 | 2843001 thru 2843499 |
| 44 | 68778-000 | ELBOW - Oil pressure hose | 1 | |
| 45 | 458-855 | ELBOW - (AN823-8) | 1 | |
| 46 | 690-626 | WASHER - (NAS1149F0732P) | 2 | |
| 47 | 476-688 | UNION - (AN816-8) | 1 | |
| 49 | 85012-101 | WASHER - Bottom engine to mount | 2 | |
| 50 | 401-543 | BOLT - Top engine to mount (AN7-43A) | 2 | |
| -50A | 401-544 | BOLT - Bottom engine to mount (AN7-44A) | 2 | |
| 50B | 690-630 | WASHER - (NAS1149F0763P) | 4 | |
| 50C | 404-891 | NUT - (MS20365-720C) | 4 | |
| 51 | 477-629 | NUT - (AS5178-04) | 1 | |
| 52 | 557-580 | CONNECTOR - Bulkhead | 1 | |
| 53 | 415-379 | SCREW - (MS51958-63) | 18 | |
| | | (Refer to Piper Service Bulletin #992 - latest revision) | | |
| -53A | 494-227 | WASHER | 18 | |
| | | (Refer to Piper Service Bulletin #992 - latest revision) | | |

-ITEM NOT ILLUSTRATED

When ordering, always specify Part Number, Description, and Serial Number of Aircraft

| Figure and Index Number | Part Number | Nomenclature | No. Req. | Serial Numbers Affected |
|---|---|---|---|---|
| 40- | | | | |
| 54 | 486-570 | SHAFT - Tachometer (Non Entegra) | 1 | |
| -54A | 494-005 | WASHER - (SAE-F-50) | 1 | |
| -55 | 84652-002 | SENSOR ASSY - Tachometer (Entegra) | 1 | 2843598 and up |

NOTES:

1. WITH SLICK MAGNETO. SECURE FROM TEXTRON, LYCOMING CORPORATION, WILLIAMSPORT, PA.

2. SUPPLIED WITH ENGINE. SECURE PART NUMBER 32C21997 FROM TEXTRON LYCOMING CORPORATION, WILLIAMSPORT, PA. SEE FIGURE 56 FOR BELTS, BRACKETS, ETC..

-ITEM NOT ILLUSTRATED

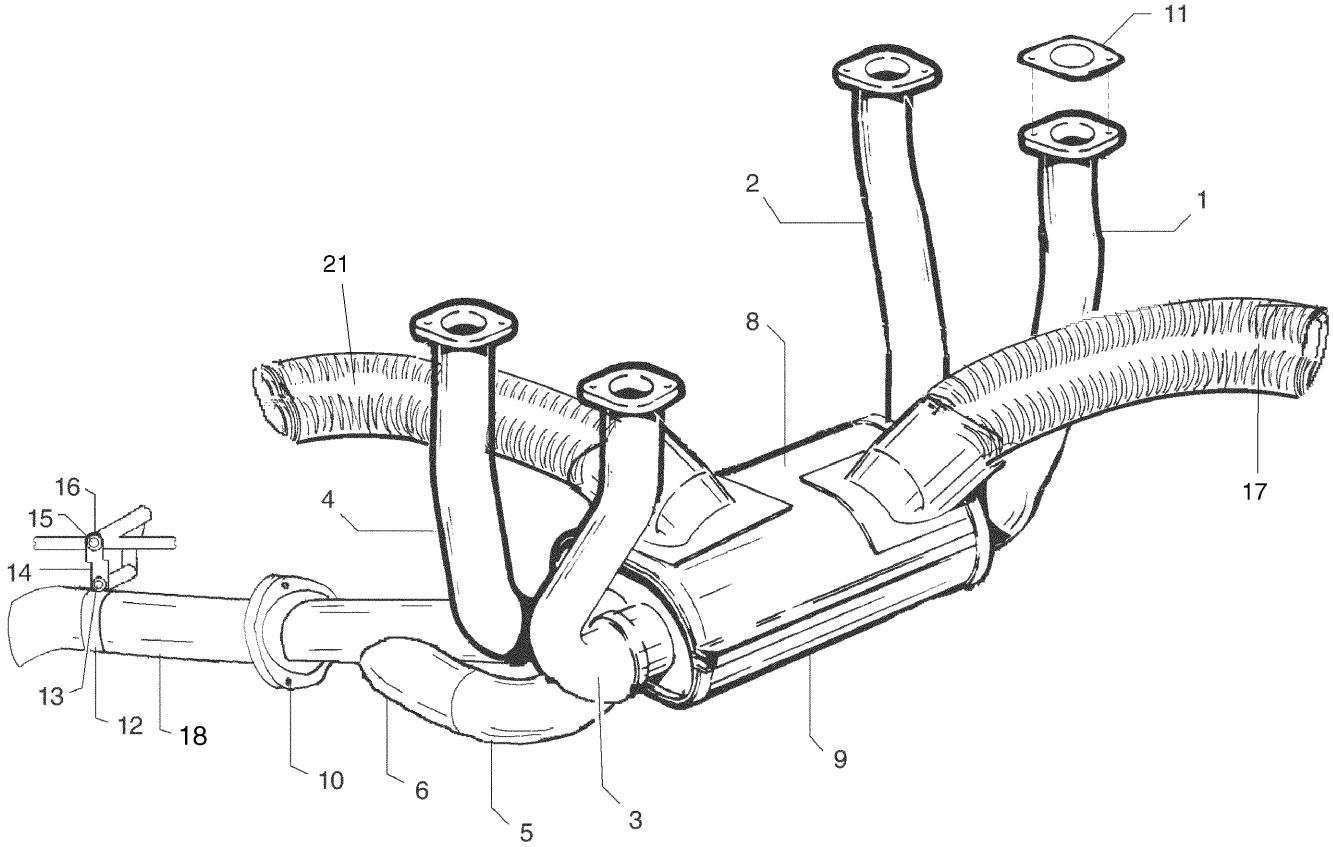


Figure 41. Engine Exhaust System Installation

| Figure and Index Number | Part Number | Nomenclature | No. Req. | Serial Numbers Affected |
|---|---|---|---|---|
| 41- | 85472 (AN) | DRAWING - Power Plant Installation | | |
| 1 | 35300-002 | STACK ASSY - Front cylinder, left | 1 | |
| 2 | 62231-005 | STACK ASSY - Rear cylinder, left | 1 | |
| 3 | 62230-003 | STACK ASSY - Front cylinder, right | 1 | |
| 4 | 62232-004 | STACK ASSY - Rear cylinder, right | 1 | |
| 5 | 85477-002 | MUFFLER ASSY | 1 | |
| 6 | 85477-005 | MUFFLER ASSY | 1 | |
| 8 | 99568-004 | SHROUD ASSY - Top | 1 | |
| 9 | 65543-002 | SHROUD ASSY - Bottom | 1 | |
| 10 | 690-091 | BOLT FLANGE | 1 | |
| -10A | 400-060 | BOLT - (AN3-15) | 3 | |
| -10B | 690-612 | WASHER - (NAS1149F0363P) | 3 | |
| -10C | 404-100 | NUT - (AN310-3) | 3 | |
| -10D | 424-051 | COTTER PIN - (MS24665-132) | 3 | |
| -10E | 487-437 | SPRING | 3 | |
| 11 | 461-905 | GASKET - (Supplied by Lycoming) | 4 | |
| 12 | 24791-006 | CLAMP ASSY | 1 | |
| -12A | 400-103 | BOLT - (AN4-6) | 3 | |
| -12B | 690-611 | WASHER - (NAS1149F0463P) | 3 | |
| -12C | 404-101 | NUT - (AN310-4) | 3 | |
| -12D | 424-051 | COTTER PIN - (MS24665-132) | 3 | |
| -12E | 63243-008 | CLAMP ASSY | 2 | |
| 13 | 400-059 | BOLT - (AN3-14) | 1 | |
| -13A | 408-833 | WASHER - (1097520)(Located between 24793-004 Strap and 24791-006 Clamp Assy on bolt head side) | 1 | |
| -13B | 82732-103 | BUSHING | 1 | |
| -13C | 690-612 | WASHER - (NAS1149F0363P) | 1 | |
| -13D | 404-100 | NUT - (AN310-3) | 1 | |
| -13E | 424-051 | COTTER PIN - (MS24665-132) | 1 | |
| 14 | 24793-004 | STRAP | 2 | |
| 15 | 400-460 | BOLT - (AN3-35A) | 1 | |
| -15A | 82732-102 | BUSHING | 1 | |
| -15B | 690-612 | WASHER - (NAS1149F0363P) | 1 | |
| -15C | 404-526 | NUT - (MS21042-3) | 1 | |
| 16 | 24820-000 | BUSHING - Rubber | 2 | |
| 17 | 63633-207 | HOSE - Air duct | 1 | |
| 18 | 85477-011 | TAIL PIPE ASSY | 1 | |
| 18 | 104628-002 | MUFFLER ASSY - Low Noise (Optional Equipment) (Refer to Piper Service Bulletin #1057 - latest revision) | 1 | 2843101 and up |
| -19 | 403-050 | . BOLT | 4 | |
| -20 | 690-617 | . WASHER | 4 | |
| 21 | 63633-208 | HOSE - Air duct | 1 | |

-ITEM NOT ILLUSTRATED

When ordering, always specify Part Number, Description, and Serial Number of Aircraft

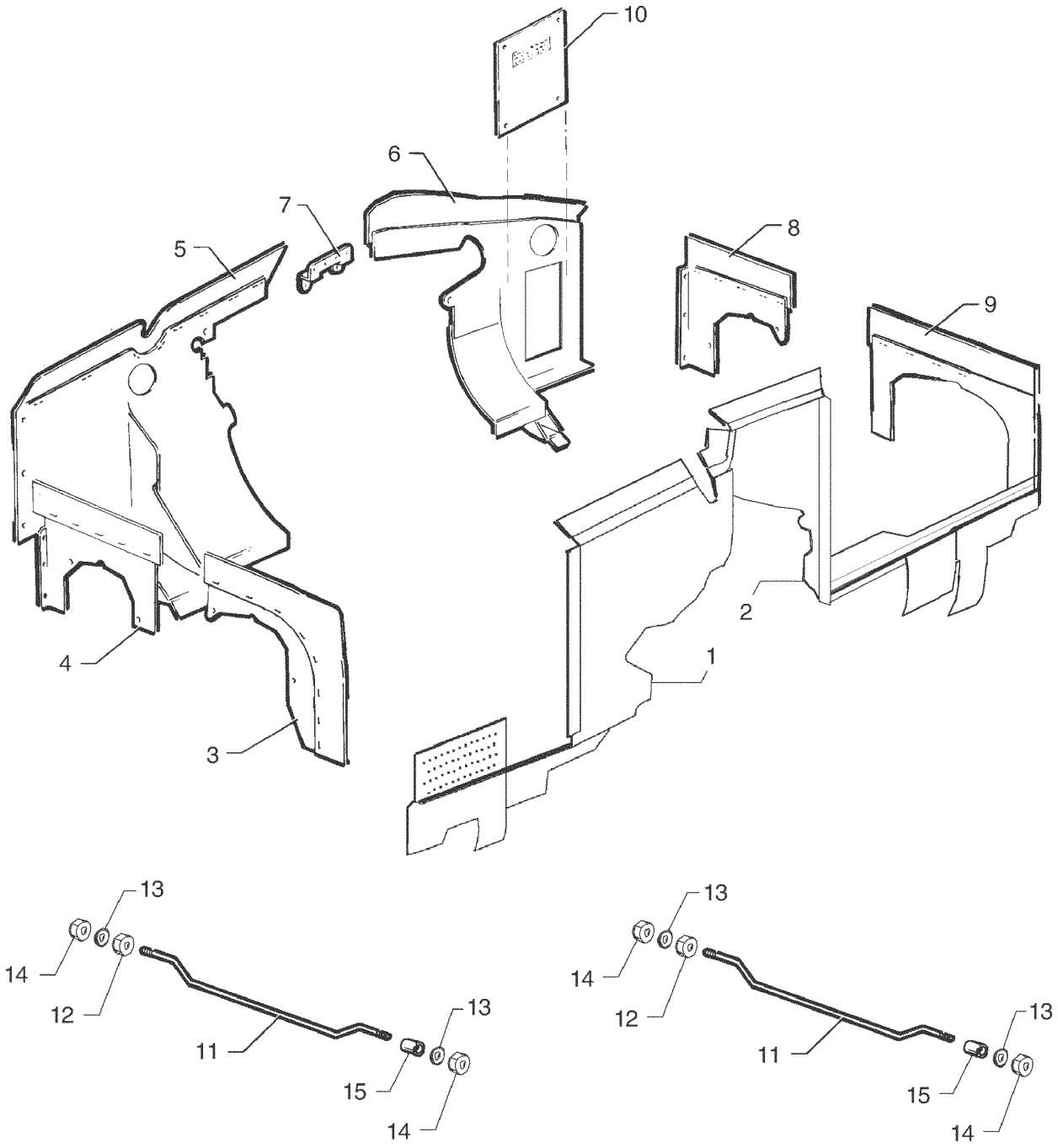


Figure 42. Engine Baffle Installation

| Figure and Index Number | Part Number | Nomenclature | No. Req. | Serial Numbers Affected |
|---|---|---|---|---|
| 42- | 85472 (AN) | DRAWING - Power Plant Installation | | |
| | 85537 (NEW) | DRAWING - Winterization Kit Installation | | |
| 1 | 85486-003 | BAFFLE ASSY - Right front | 1 | |
| -1A | 411-532 | SCREW - (MS35207-263) | 2 | |
| -1B | 690-612 | WASHER - (NAS1149F0363P) | 2 | |
| 2 | 85486-002 | BAFFLE ASSY - Left front | 1 | |
| 3 | 85485-014 | BAFFLE ASSY - Right side, front | 1 | |
| -3A | 411-532 | SCREW - (MS35207-263) | 2 | |
| -3B | 690-609 | WASHER - (NAS1149F0332P) | 2 | |
| -3C | 404-526 | NUT - (MS21042-3) | 2 | |
| 4 | 85485-015 | BAFFLE ASSY - Right side, rear | 1 | |
| -4A | 415-544 | SCREW - (MS35206-244) | 1 | |
| -4B | 606-616 | WASHER - (NAS1149FN832P) | 1 | |
| -4C | 404-529 | NUT - (MS21042-08) | 1 | |
| 5 | 85487-003 | BAFFLE ASSY - Right rear | 1 | |
| 6 | 85487-002 | BAFFLE ASSY - Left rear | 1 | |
| 7 | 63605-000 | BRACKET - Rear baffle reinforcement | 1 | |
| 8 | 85485-004 | BAFFLE ASSY - Left side, rear | 1 | |
| 9 | 85485-002 | BAFFLE ASSY - Left side, front | 1 | |
| -9A | 415-553 | SCREW - (MS35206-263) | 2 | |
| -9B | 690-609 | WASHER - (NAS1149F0332P) | 2 | |
| -9C | 404-526 | NUT - (MS21042-3) | 2 | |
| 10 | 85470-002 | KIT - Oil cooler winterization | 1 | |
| -10A | 85470-003 | . PLATE - Oil cooler winterization | 1 | |
| -10B | 63408-000 | . PLACARD - Oil cooler winterization | 1 | |
| 11 | 14513-000 | ROD - Baffle tie | 2 | |
| 12 | 405-450 | NUT - (MS35649-262) | 2 | |
| 13 | 690-639 | WASHER - (NAS1149FN616P) | 4 | |
| 14 | 404-528 | NUT - (MS21042-06) | 4 | |
| 15 | 63900-014 | BUSHING | 2 | |
| -16 | 418-421 | CAP SCREW - (1/4 x 20 NC - 3 x 5/8 LG) (Refer to Piper Service Bulletin #1050 - latest revision) | 11 | |
| -16A | 408-051 | LOCKWASHER - (MS35333-40) (Refer to Piper Service Bulletin #1050 - latest revision) | 11 | |
| -16B | 690-611 | WASHER - (NAS1149F0463P) (Refer to Piper Service Bulletin #1050 - latest revision) | 11 | |

-ITEM NOT ILLUSTRATED

When ordering, always specify Part Number, Description, and Serial Number of Aircraft

THIS PAGE INTENTIONALLY LEFT BLANK

THIS PAGE INTENTIONALLY LEFT BLANK

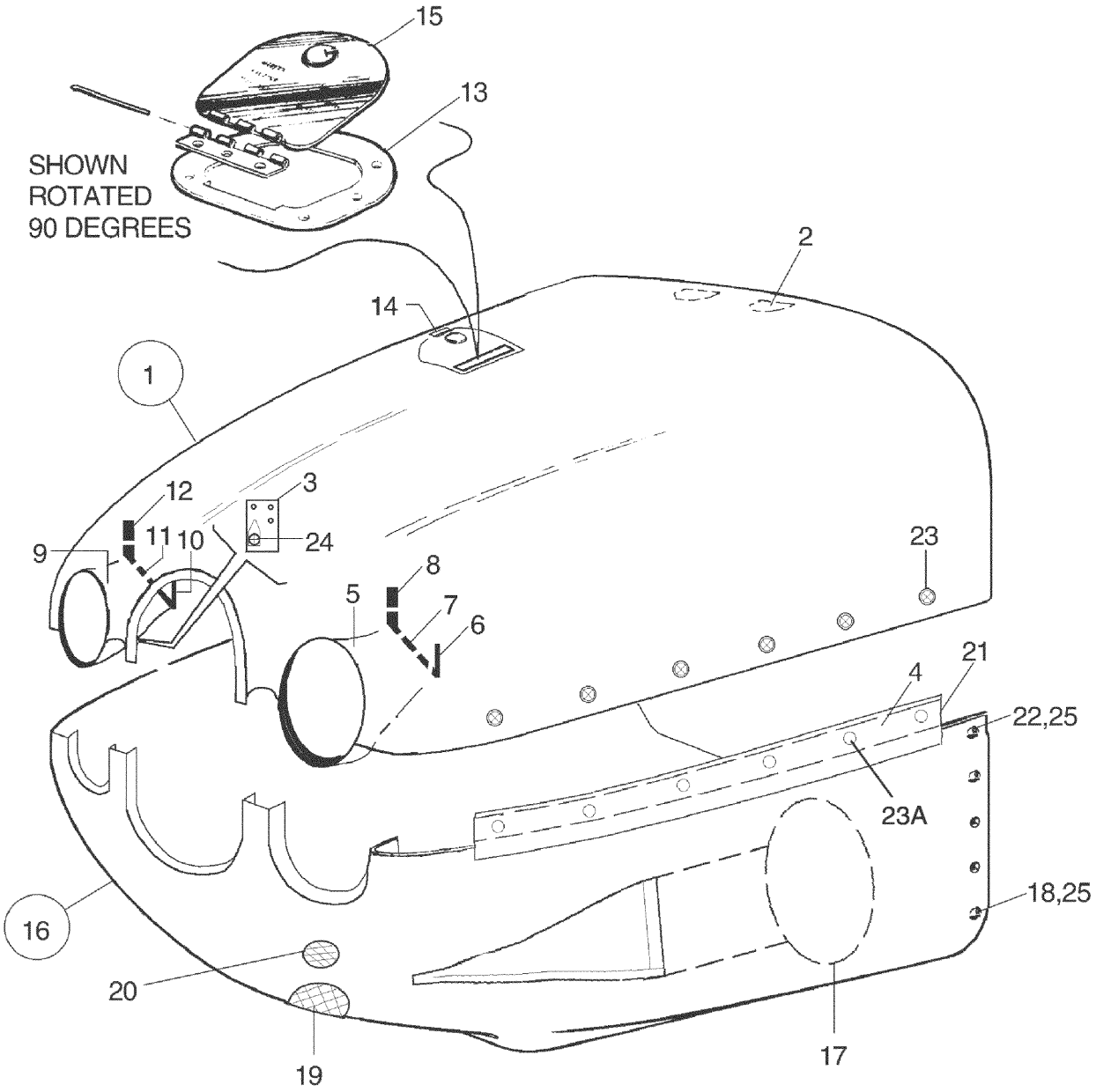


Figure 43. Engine Cowl Installation

| Figure and Index Number | Part Number | Nomenclature | No. Req. | Serial Numbers Affected |
|---|---|---|---|---|
| 43 | 83350 (V) | DRAWING - Cowl Assy and Installation | | |
| 1 | 83350-018 | COWL ASSY - Upper | 1 | 2843082 and up |
| 1 | 83350-004 | COWL ASSY - Upper | 1 | 2843001 thru 2843081 |
| 2 | 65150-000 | . PLATE ASSY - Left and right | 2 | 2843001 thru 2843081 |
| 3 | 85238-017 | . PLATE ASSY - Left | 1 | |
| -3A | 85238-015 | . PLATE ASSY - Right | 1 | |
| 4 | 85326-007 | . INSERT - Left and right | 2 | 2843001 thru 2843081 |
| 4 | 85326-008 | . INSERT - Left and right | 2 | 2843082 and up |
| 5 | 85475-008 | . INLET ASSY - Left | 1 | |
| 6 | 85475-012 | . . SEAL | 1 | |
| -6A | 85475-022 | . . RETAINER | 1 | |
| 7 | 85475-015 | . . SEAL | 1 | |
| -7A | 85475-025 | . . RETAINER | 1 | |
| 8 | 85475-014 | . . SEAL | 1 | |
| -8A | 85475-024 | . . RETAINER | 1 | |
| 9 | 85475-009 | . INLET ASSY - Right | 1 | |
| 10 | 85475-011 | . . SEAL | 1 | |
| -10A | 85475-021 | . . RETAINER | 1 | |
| 11 | 85475-016 | . . SEAL | 1 | |
| -11A | 85475-026 | . . RETAINER | 1 | |
| 12 | 85475-013 | . . SEAL | 1 | |
| -12A | 85475-023 | . . RETAINER | 1 | |
| 13 | 85481-011 | . PLATE ASSY - Oil filler door | 1 | |
| 14 | 99094-004 | . PLATE ASSY - Striker | 1 | |
| 15 | 99096-002 | . DOOR ASSY - Oil filler | 1 | |
| -15A | 85481-010 | . . DOOR | 1 | |
| -15B | 472-017 | . . LATCH - Oil filler door | 1 | |
| -15C | 65291-003 | . . HINGE ASSY - Oil filler door | 1 | |
| 16 | 83350-003 | COWL ASSY - Lower | 1 | 2843001 thru 2843081 |
| 16 | 83350-017 | COWL ASSY - Lower | 1 | 2843082 and up |
| 17 | 83350-012 | . AIR BOX | 1 | |
| 18 | 65061-000 | . INSERT - Left and right | 8 | |
| 19 | 85481-002 | . INLET ASSY | 1 | |
| -19A | 85481-009 | . SCREEN | 1 | |
| 20 | 85238-019 | . INLET ASSY | 1 | |
| -20A | 85238-021 | . SCREEN | 1 | |
| 21 | 85488-002 | . CHANNEL ASSY - Cowl, left | 1 | 2843001 thru 2843081 |
| 21 | 85488-008 | . CHANNEL ASSY - Cowl, left | 1 | 2843082 and up |
| -21A | 85488-003 | . CHANNEL ASSY - Cowl, right | 1 | 2843001 thru 2843081 |
| -21A | 85488-010 | . CHANNEL ASSY - Cowl, right | 1 | 2843082 and up |
| 22 | 95479-000 | . INSERT - Left and right | 2 | |
| 23 | 487-728 | STUD - Left and right | 12 | 2843001 thru 2843081 |
| 23 | 487-685 | STUD - (1142000-8)<br>(Or 487-684 - 1142000-7) | 2 | 2843082 and up |
| 23A | 584-019 | RECEPTACLE - Left and right (1142700) | 2 | 2843082 and up |
| -24 | 411-532 | SCREW - (MS35207-263) | 2 | |
| -24A | 690-612 | WASHER - (NAS1148F0363P) | 2 | |
| -25 | 416-626 | SCREW - (MS24693-C273) | 13 | |
| -25A | 508-008 | WASHER | 13 | |

-ITEM NOT ILLUSTRATED

When ordering, always specify Part Number, Description, and Serial Number of Aircraft

THIS PAGE INTENTIONALLY LEFT BLANK

THIS PAGE INTENTIONALLY LEFT BLANK

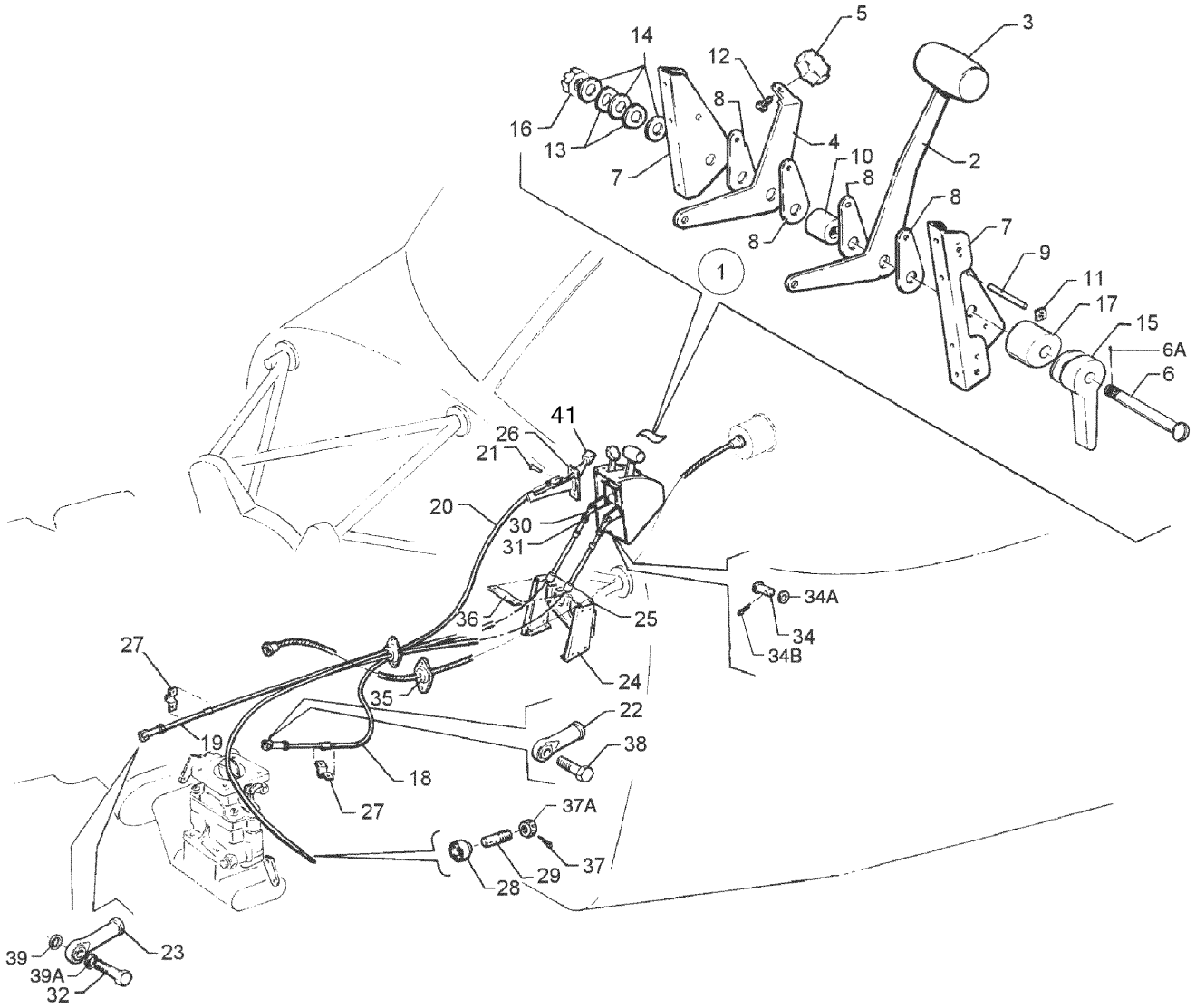


Figure 44. Engine Controls Installation

| Figure and Index Number | Part Number | Nomenclature | No. Req. | Serial Numbers Affected |
|---|---|---|---|---|
| 44- | 65848 (AN) | DRAWING - Engine Controls Installation | | |
| | 76220 (D) | DRAWING - Duct Installation | | |
| 1 | 65850-002 | QUADRANT ASSY - Control | | |
| 2 | 67223-000 | . LEVER ASSY - Throttle | 1 | |
| 3 | 66979-000 | . . KNOB - Throttle lever | 1 | |
| -3A | 411-532 | . . SCREW - (MS35207-263) | 1 | |
| 4 | 67214-000 | . LEVER - Mixture control | 1 | |
| 5 | 24048-000 | . KNOB - Mixture control | 1 | |
| 6 | 694-209 | . BOLT - (AN5-31) | 1 | |
| 6A | 424-051 | . COTTER PIN - (MS24665-132) | 1 | |
| -6B | 62833-046 | . WASHER | 1 | |
| 7 | 67215-003 | . BRACKET ASSY - Quadrant, left | 1 | |
| -7A | 67216-000 | . BRACKET ASSY - Quadrant, right | 1 | |
| 8 | 67218-000 | . PLATE - Quadrant, friction (0.031 thick) | 2 | |
| -8A | 67218-002 | . PLATE - Quadrant, friction (0.062 thick) | 2 | |
| 9 | 67221-000 | . PIN - Quadrant, friction plate | 1 | |
| 10 | 68699-011 | . SPACER - Quadrant | 1 | |
| 11 | 406-345 | . NUT - (A109-014-1) | 2 | |
| 12 | 415-448 | . SCREW - (AN526-832R6) | 1 | |
| 13 | 408-815 | . WASHER - (3502-18-04) | 2 | |
| 14 | 690-619 | . WASHER - (NAS1149F0532P) | AR | |
| 15 | 63039-004 | . HANDLE - Quadrant adjusting (2.94” L.) | 1 | |
| 16 | 404-394 | . NUT - (AN320-5) | 1 | |
| 17 | 66774-000 | . CAM - Control | 1 | |
| -17A | 414-694 | . SCREW - (MS24693-S2) | 2 | |
| 18 | 455-352 | CONTROL ASSY - Mixture | 1 | |
| -18A | 454-929 | CLAMP | 2 | |
| -18B | 411-532 | SCREW - (MS35207-263) | 1 | |
| -18C | 404-526 | NUT - (MS21042-3) | 1 | |
| 19 | 455-350 | CONTROL ASSY - Throttle | 1 | |
| -19A | 454-932 | CLAMP | 1 | |
| -19B | 411-531 | SCREW - (MS35207-262) | 1 | |
| -19C | 404-526 | NUT - (MS21042-3) | 1 | |
| 20 | 554-094 | CABLE ASSY - Carburetor heat control | 1 | |
| -20A | 454-887 | CLAMP | 1 | |
| -20B | 411-532 | SCREW - (MS35207-263) | 1 | |
| -20C | 690-609 | WASHER - (NAS1149F0332P) | 1 | |
| -20D | 404-526 | NUT - (MS21042-3) | 1 | |
| -20E | 454-928 | CLAMP | 1 | |
| -20F | 454-868 | CLAMP | 1 | |
| -20G | 411-532 | SCREW - (MS35207-263) | 1 | |
| -20H | 404-526 | NUT - (MS21042-3) | 1 | |
| 21 | 400-674 | SCREW - (AN23-12) | 1 | |
| -21A | 690-612 | WASHER - (NAS1149F0363P) | 2 | |
| -21B | 603-314 | NUT - (MS14144-L3) | 1 | |
| -21C | 424-039 | COTTER PIN - (MS24665-69) | 1 | |
| 22 | 452-606 | BEARING - Rod end, mixture control | 1 | |
| -23 | 452-606 | BEARING - Rod end, throttle control | 1 | |
| -24 | 67206-002 | SUPPORT ASSY - Engine controls | 1 | |
| -24A | 67224-003 | . BRACKET ASSY - Engine controls | 1 | |
| -24B | 415-544 | SCREW - (MS35206-244) | 2 | |
| -24C | 690-616 | WASHER - (NAS1149FN832P) | 2 | |
| -24D | 404-529 | NUT - (MS21042-08) | 2 | |
| -25 | DELETED | | | |

-ITEM NOT ILLUSTRATED

When ordering, always specify Part Number, Description, and Serial Number of Aircraft

| Figure and Index Number | Part Number | Nomenclature | No. Req. | Serial Numbers Affected |
|---|---|---|---|---|
| 44- | | | | |
| 26 | 66835-000 | CONTROL MOUNT - Carburetor heat | 1 | |
| -26A | 515-717 | SCREW | 2 | |
| -26B | 690-612 | WASHER - (NAS1149F0332P) | 2 | |
| -26C | 554-757 | CLEVIS - (MS35812-1) | 1 | |
| 27 | 18219-002 | CLAMP - Control cable | 2 | |
| -27A | 415-536 | SCREW - (MS35206-246) | 4 | |
| -27B | 690-616 | WASHER - (NAS1149FN832P) | 16 | |
| -27C | 404-529 | NUT - (MS21042-08) | 4 | |
| 28 | 70371-002 | FITTING - Swivel | 1 | |
| 29 | 70371-003 | STUD - Swivel fitting | 1 | |
| 30 | 488-327 | TERMINAL | 2 | |
| 31 | 404-224 | NUT - (AN315-3R) | 4 | |
| -31A | 407-043 | WASHER - (MS35338-43) | 4 | |
| 32 | 400-061 | BOLT - (AN3-16) | 1 | |
| -32A | 62833-101 | WASHER | 1 | |
| -32B | 690-612 | WASHER - (NAS1149F0363P) | 3 | |
| -32C | 603-314 | NUT - (MS14144-L3) | 1 | |
| -32D | 424-039 | COTTER PIN - (MS24665-69) | 1 | |
| 34 | 524-145 | PIN - (MS20392-2C11) | 2 | |
| 34A | 690-609 | WASHER - (NAS1149F0332P) | 2 | |
| 34B | 424-051 | COTTER PIN - (MS24665-132) | 2 | |
| 35 | 68771-006 | GASKET - Firewall, tachometer shaft | 1 | |
| -35A | 22103-003 | PLATE - Firewall, tachometer shaft | 2 | |
| -35B | 68770-018 | GROMMET - Firewall, tachometer shaft | 2 | |
| 36 | 67225-000 | RETAINER - Engine controls | 1 | |
| -36A | 415-536 | SCREW - (MS35206-246) | 2 | |
| 37 | 424-051 | COTTER PIN - (MS24665-132) | 1 | |
| 37A | 404-392 | NUT - (AN320-3) | 1 | |
| -37B | 690-612 | WASHER - (NAS1149F0363P) | 1 | |
| 38 | 400-056 | BOLT - (AN3-11) | 1 | |
| -38A | 63900-119 | BUSHING | 1 | |
| -38B | 63900-078 | BUSHING | 2 | |
| -38C | 62833-101 | WASHER | 1 | |
| -38D | 407-043 | WASHER - (MS35338-43) | 1 | |
| -38E | 690-612 | WASHER - (NAS1149F0332P) | 1 | |
| -38F | 603-314 | NUT - (MS14144-L3) | 1 | |
| -38G | 424-039 | COTTER PIN - (MS24665-69) | 1 | |
| 39 | 63900-070 | BUSHING | 1 | |
| 39A | 63900-075 | BUSHING | 1 | |
| -40 | 36511-002 | DUCT ASSY - Cabin Heat | 1 | |
| -40A | 36511-003 | DUCT ASSY - Cabin Heat | 1 | |
| 41 | 66980-000 | . KNOB - Cabin heat | 1 | |

-ITEM NOT ILLUSTRATED

THIS PAGE INTENTIONALLY LEFT BLANK

**GRIDS 1H10 THRU 1H12**
**INTENTIONALLY LEFT BLANK**

# SECTION VIII
# FUEL SYSTEM GROUP

Reissued: December 10, 2006



Island Enterprises

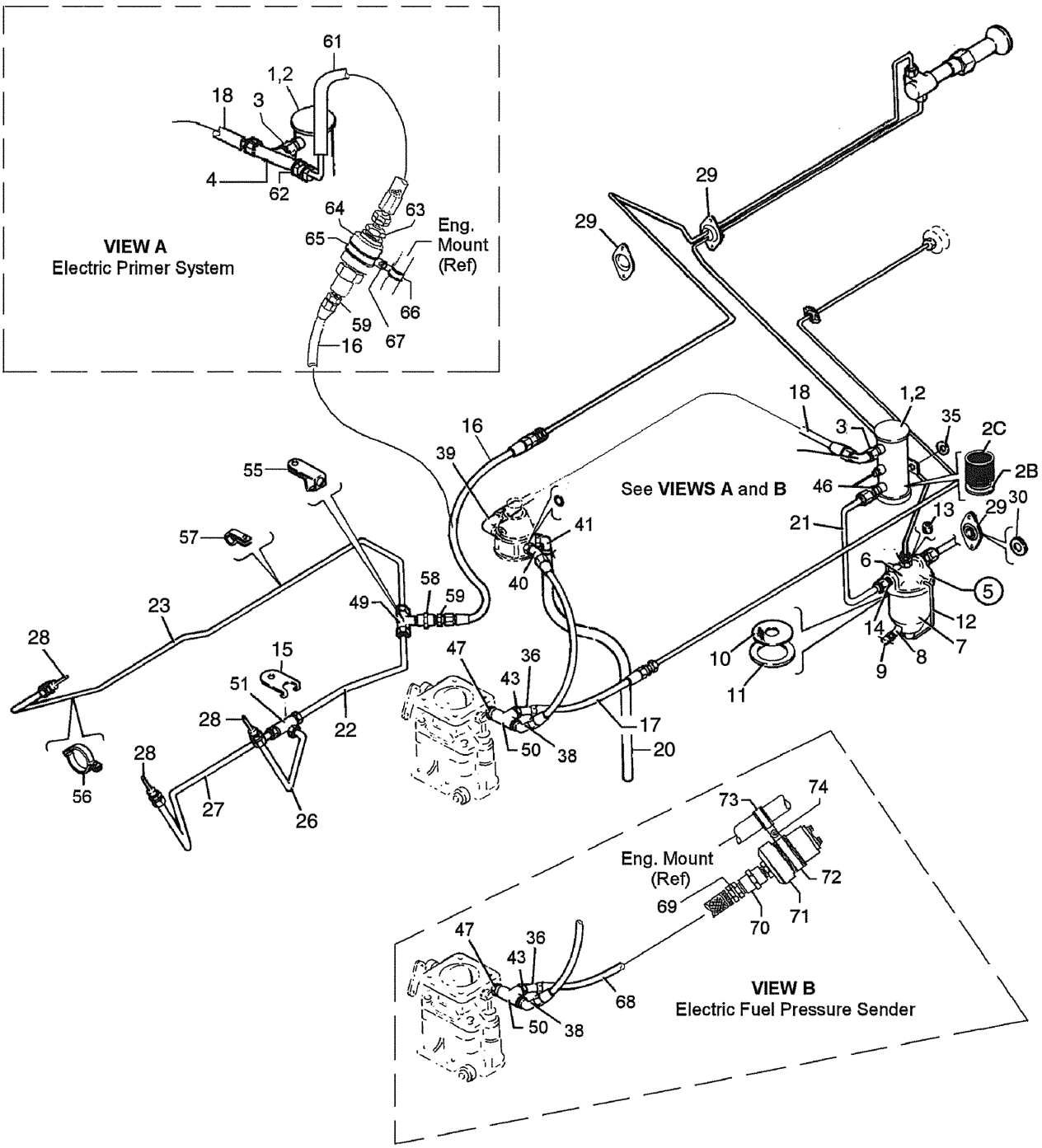


Figure 45. Forward Fuel System Installation

| Figure and Index Number | Part Number | Nomenclature | No. Req. | Serial Numbers Affected |
|---|---|---|---|---|
| 45- | 35328 (AN) | DRAWING - Forward Fuel System Installation | | |
| | 89367 (G) | DRAWING - Electric Primer System Installation | | |
| 1 | 35328-006 | PUMP ASSY - Electric fuel | 1 | |
| | | (Refer to Piper Service Bulletin #1079 - latest revision) | | |
| 2 | 62220-004 | . PUMP ASSY - Electric fuel | 1 | |
| | | (Refer to Piper Service Bulletin #1079 - latest revision) | | |
| -2A | 461-740 | . . PUMP - Electric fuel - (476088E) | 1 | |
| 2B | 751-872 | . . GASKET - Cover | 1 | |
| 2C | 751-799 | . . SCREEN - Filter | 1 | |
| 3 | 451-872 | . ADAPTER | 1 | |
| 4 | 691-223 | . TEE - (MS20825-6) | 1 | |
| | | (Used if Electric Primer System is installed) | | |
| 5 | 35715-003 | GASCOLATOR ASSY - Fuel | 1 | |
| 6 | 87477-002 | . COVER - Fuel strainer | 1 | |
| 7 | 63479-000 | . BOWL ASSY - Gascolator | 1 | |
| 8 | 458-946 | . . ELBOW - Drain - (AN915-1D) | 1 | |
| 9 | 492-312 | . . VALVE - Drain - (CCA-36150) (Refer to Piper Service Bulletin | 1 | |
| | | (Refer to Piper Service Bulletin #1037 - latest revision) | | |
| 10 | 35789-002 | . SCREEN - Fuel strainer | 1 | |
| 11 | 462-049 | . GASKET - (44PA) | 1 | |
| 12 | 494-644 | . WIRE - Bail - (100871-2) | 1 | |
| 13 | 690-812 | . PLUG - (Used if Engine Primer System is not installed) | 1 | |
| 14 | 476-678 | . NIPPLE - (AN816-6) | 1 | |
| 15 | 14470-000 | BRACKET - Primer tee | 1 | |
| 16 | 63901-077 | HOSE ASSY - Flexible, primer (3/16” I.D.) (565-525) | 1 | |
| 17 | 63901-195 | HOSE ASSY - Flexible, to pressure gauge (566-414) | 1 | |
| | | (Non Entegra) | | |
| 17 | 63901-177 | HOSE ASSY - Flexible, to pressure gauge (566-330) | 1 | 2843598 and up |
| | | (Entegra) | | |
| 18 | 63901-057 | HOSE ASSY - Flexible, electric pump to engine pump | 1 | |
| -19 | 90797-002 | SLEEVE | 7 | |
| 20 | 69015-004 | HOSE - Flexible, engine fuel pump vent | 1 | |
| 21 | 35457-000 | TUBE ASSY - Fuel gascolator to electric pump | 1 | |
| 22 | 63806-000 | TUBE ASSY - Primer | 1 | |
| -23 | 63807-000 | TUBE ASSY - Primer | 1 | |
| -24 | 454-927 | CLAMP | 2 | |
| -25 | 454-930 | CLAMP | 2 | |
| 26 | 63837-000 | TUBE ASSY - Primer | 1 | |
| 27 | 63838-000 | TUBE ASSY - Primer | 1 | |
| 28 | 31197-000 | JET ASSY - Primer | 3 | |
| 29 | 18321-000 | PLATE - Fire wall seal | 2 | |
| 30 | 63915-014 | DISC - Fire wall seal | 2 | |
| -32 | 404-529 | NUT - (MS21042-08) | 1 | |
| -33 | 488-702 | TIE - Cable (MS3367-1-9) | 2 | |
| -34 | 415-533 | SCREW - (MS35206-243) | 6 | |
| 35 | 62219-000 | SPACER - Fuel pump mounting | 1 | |
| -35A | 400-002 | BOLT - (AN4-5A) | 2 | |
| 36 | 66768-000 | ELBOW - 45 degrees (restricted) (Non Entegra) | 1 | |
| 38 | 458-844 | ELBOW - (MS20823-6) (Non Entegra) | 1 | |
| 39 | 558-829 | ELBOW - 90 degrees | 1 | |
| 40 | 458-948 | ELBOW - (1K1-2-4) | 1 | |
| -40A | 454-983 | CLAMP | 1 | |
| 41 | 558-832 | ELBOW - 45 degrees (Non Entegra) | 1 | |
| 41 | 556-408 | CONNECTOR - (6 F50X-S) (Entegra) | 1 | 2843598 and up |

-ITEM NOT ILLUSTRATED

When ordering, always specify Part Number, Description, and Serial Number of Aircraft

| Figure and Index Number | Part Number | Nomenclature | No. Req. | Serial Numbers Affected |
|---|---|---|---|---|
| 45- | | | | |
| 43 | 453-680 | BUSHING - Reducer - (AN912-1J) (Non Entegra) | 1 | |
| 46 | 476-685 | NIPPLE - (AN816-6-2) | 1 | |
| 47 | 476-705 | NIPPLE - (C3069x4) | 1 | |
| 49 | 588-436 | TEE - (MS20825-2D) | 1 | |
| 50 | 588-391 | TEE - (C3709x4) (Non Entegra) | 1 | |
| 51 | 460-652 | TEE - (702x2) | 1 | |
| 55 | 65429-002 | CLAMP - Primer tee | 1 | |
| 56 | 21230-000 | CLAMP - Primer line | 1 | |
| -56A | 415-521 | SCREW - (MS35206-231) | 1 | |
| -56B | 404-528 | NUT - (MS21042-06) | 1 | |
| 57 | 80032-069 | CLAMP - Primer line | 4 | |
| 58 | 455-173 | COUPLING | 1 | |
| 59 | 476-647 | NIPPLE - (AN816-3D) | 2 | |
| 61 | 56958-028 | HOSE ASSY - Flexible - (566-039) | 1 | |
| | | (Used if Electric Primer System is installed) | | |
| 62 | 553-685 | BUSHING - (Used if Electric Primer System is installed) | 1 | |
| 63 | 476-686 | NIPPLE - (Used if Electric Primer System is installed) | 1 | |
| 64 | 86875-004 | VALVE ASSY - Solenoid | 1 | |
| | | (Used if Electric Primer System is installed) | | |
| -64A | 592-634 | . VALVE - Solenoid - (5147-00-1) | 1 | |
| | | (Used if Electric Primer System is installed) | | |
| 65 | 554-941 | CLAMP - (Used if Electric Primer System is installed) | 1 | |
| 66 | 454-868 | CLAMP - (Used if Electric Primer System is installed) | 1 | |
| 67 | 411-532 | SCREW - (MS35207-263) | 3 | |
| | | (Used if Electric Primer System is installed) | | |
| -67A | 404-526 | NUT - (MS21042-3) | 3 | |
| | | (Used if Electric Primer System is installed) | | |
| -67B | 690-609 | WASHER - (NAS1149F0332P) | 1 | |
| | | (Used if Electric Primer System is installed) | | |
| 68 | 63901-081 | HOSE ASSY - Flexible (Non Entegra) | 1 | |
| | | (Used if Electric Fuel Pressure Sender is installed) | | |
| 69 | 476-697 | NIPPLE - (AN816-3) (Non Entegra) | 1 | |
| | | (Used if Electric Fuel Pressure Sender is installed) | | |
| 69 | 476-678 | NIPPLE - (AN816-6) (Entegra) | 1 | 2843598 and up |
| 70 | 455-174 | COUPLING - (3300x2) (Non Entegra) | 1 | |
| | | (Used if Electric Fuel Pressure Sender is installed) | | |
| 71 | 486-439 | SENDER - Fuel pressure (Non Entegra) | 1 | 2843001 thru 2843027 |
| | | (Used if Electric Fuel Pressure Sender is installed) | | |
| 71 | 548-915 | SENDER - Fuel pressure (Non Entegra) | 1 | 2843028 and up |
| | | (Used if Electric Fuel Pressure Sender is installed) | | |
| 71 | 84522-003 | TRANSDUCER ASSY - Fuel flow (Entegra) | 1 | 2843598 and up |
| 72 | 454-977 | CLAMP (Non Entegra) | 1 | |
| | | (Used if Electric Fuel Pressure Sender is installed) | | |
| -72A | 554-885 | CLAMP - Optional (Non Entegra) | 1 | |
| 73 | 454-868 | CLAMP (Non Entegra) | 1 | |
| | | (Used if Electric Fuel Pressure Sender is installed) | | |
| 74 | 411-532 | SCREW - (MS35207-263) (Non Entegra) | 1 | |
| | | (Used if Electric Fuel Pressure Sender is installed) | | |
| -74A | 404-526 | NUT - (MS21042-3) (Non Entegra) | 1 | |
| | | (Used if Electric Fuel Pressure Sender is installed) | | |
| -74B | 690-609 | WASHER - (NAS1149F0332P) (Non Entegra) | 1 | |
| | | (Used if Electric Fuel Pressure Sender is installed) | | |

-ITEM NOT ILLUSTRATED

When ordering, always specify Part Number, Description, and Serial Number of Aircraft



Island Enterprises

THIS PAGE INTENTIONALLY LEFT BLANK

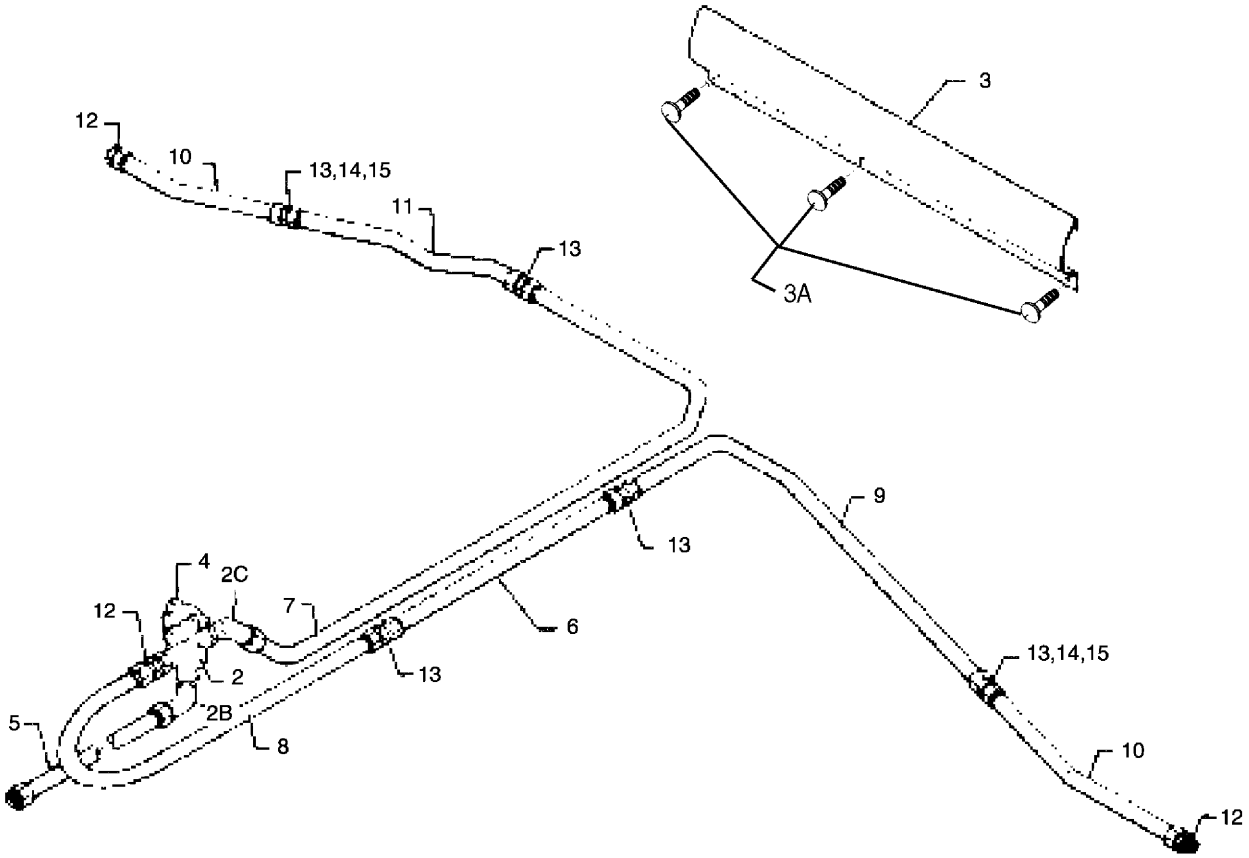


Figure 46. Aft Fuel System Installation

| Figure and Index Number | Part Number | Nomenclature | No. Req. | Serial Numbers Affected |
|---|---|---|---|---|
| 46- | 35645 (T) | DRAWING - Aft Fuel System Installation | | |
| -1 | 63842-006 | VALVE ASSY | 1 | |
| 2 | 491-947 | . VALVE - Fuel selector (6S122) | 1 | |
| -2A | 476-662 | . FITTING - (AN816-6D) | 1 | |
| 2B | 558-802 | . ELBOW - (AN822-6D) | 1 | |
| 2C | 559-083 | . ELBOW - (AN823-6D) | 1 | |
| 3 | 67661-000 | GUARD - Fuel line | 1 | |
| 3A | 415-536 | SCREW - (MS35206-246) | 3 | |
| -3B | 477-778 | NUT | 3 | |
| 4 | 99754-002 | SUPPORT ASSY - Fuel selector cover | 1 | |
| -4A | 99756-000 | . SPRING (587-297) | 1 | |
| 5 | 62305-000 | TUBE ASSY - Fuel line | 1 | |
| 6 | 67700-025 | TUBE ASSY - Fuel line, left | 1 | |
| 7 | 67700-056 | TUBE ASSY - Fuel line, right | 1 | |
| 8 | 67700-057 | TUBE ASSY - Fuel line, left | 1 | |
| 9 | 98044-070 | TUBE ASSY - Fuel line, left | 1 | |
| 10 | 98044-071 | TUBE ASSY - Fuel line, left | 1 | |
| 11 | 98044-072 | TUBE ASSY - Fuel line, right | 1 | |
| 12 | 476-662 | NIPPLE - (AN816-6D) | 1 | |
| 13 | 491-082 | UNION - (6-HI-D) | 5 | |
| 14 | 477-670 | NUT - (6-B12D) | 2 | |
| 15 | 460-464 | FERRULE - (6T12-D) | 2 | |

-ITEM NOT ILLUSTRATED

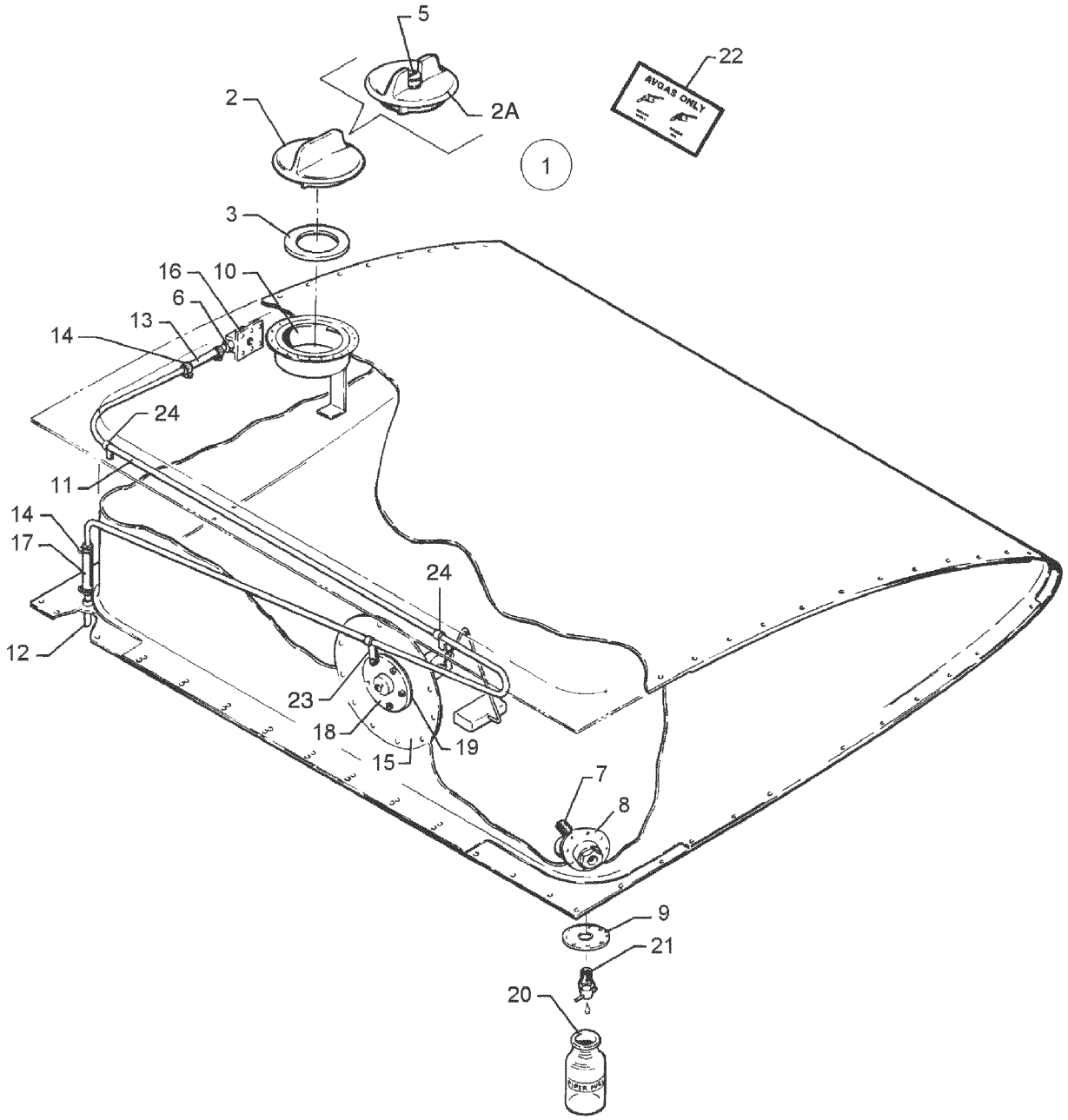


Figure 47. Fuel Tank Assembly

| Figure and Index Number | Part Number | Nomenclature | No. Req. | Serial Numbers Affected |
|---|---|---|---|---|
| 47- | 35633 (AK) | DRAWING - Tank Assy-Fuel | | |
| | 62924 (D) | DRAWING - Bottle Assy | | |
| 1 | 35633-004 | TANK ASSY - Fuel, left | 1 | |
| -1A | 35633-005 | TANK ASSY - Fuel, right | 1 | |
| 2 | 654-557 | . CAP ASSY - Fuel filler with vent valve (non-locking) | 1 | |
| 2A | 654-556 | . CAP ASSY - Fuel filler, Flush with vent valve (locking) | 1 | |
| 3 | 66815-000 | . . GASKET - Fuel cap (462-056) | 1 | 2843001 thru 2843020 |
| | | (Used with fuel cap assembly 39824-002 only) | | |
| -4 | 39822-003 | . . GASKET | 1 | 2843001 thru 2843020 |
| | | (Used with fuel cap assembly 39824-002 only) | | |
| 5 | 39856-002 | . . LOCK ASSY - Fuel cap | 1 | 2843001 thru 2843020 |
| | | (Used with fuel cap assembly 39824-002 only) | | |
| 6 | 560-951 | . ADAPTER - Without bead | 1 | |
| 7 | 72091-000 | . STRAINER - Fuel tank finger | 1 | |
| 8 | 35638-000 | . OUTLET ASSY - Fuel tank, left | 1 | |
| -8A | 35638-001 | . OUTLET ASSY - Fuel tank, right | 1 | |
| 9 | 62033-000 | . PLATE - Drain | 1 | |
| 10 | 87241-010 | . FILLER NECK ASSY | 1 | |
| 11 | 62060-004 | . VENT TUBE - Left (without bead) | 1 | |
| -11A | 62060-005 | . VENT TUBE - Right (without bead) | 1 | |
| 12 | 36625-002 | . VENT ASSY - Fuel tank, left | 1 | |
| -12A | 36625-003 | . VENT ASSY - Fuel tank, right | 1 | |
| 13 | 56976-037 | . HOSE - Connector | 1 | |
| 14 | 554-575 | . CLAMP | 4 | |
| 15 | 62044-000 | . PLATE - Fuel tank | 1 | |
| 16 | 62059-000 | . FITTING - Fuel line | 1 | |
| 17 | 63913-218 | . HOSE - Connector | 1 | |
| 18 | 548-671 | . SENDER - Fuel | 2 | |
| 19 | 755-049 | . . GASKET - Fuel gauge | 1 | |
| -19A | 401-266 | . BOLT - (AN3-5A) | 5 | |
| -19B | 407-043 | . WASHER - (MS35338-43) | 5 | |
| -19C | 690-612 | . WASHER - (NAS1149FN363P) | 5 | |
| 20 | 533-381 | BOTTLE - Container, glass | 1 | |
| 21 | 492-022 | VALVE - Drain (CCA-1550) | 2 | |
| 22 | 456-682 | DECAL - Avgas | 2 | |
| -23 | 454-813 | CLAMP | 1 | |
| -23A | 690-609 | WASHER - (NAS1149F0332P) | 1 | |
| -24 | 454-929 | CLAMP | 2 | |
| -24A | 416-098 | SCREW - (MS35265-45) | 2 | |
| -25 | 38583-002 | SPACER | 1 | |

-ITEM NOT ILLUSTRATED

When ordering, always specify Part Number, Description, and Serial Number of Aircraft

**GRIDS 1H22 THRU 1H24**
**INTENTIONALLY BLANK**

# SECTION IX
# CONTROL SYSTEM GROUP

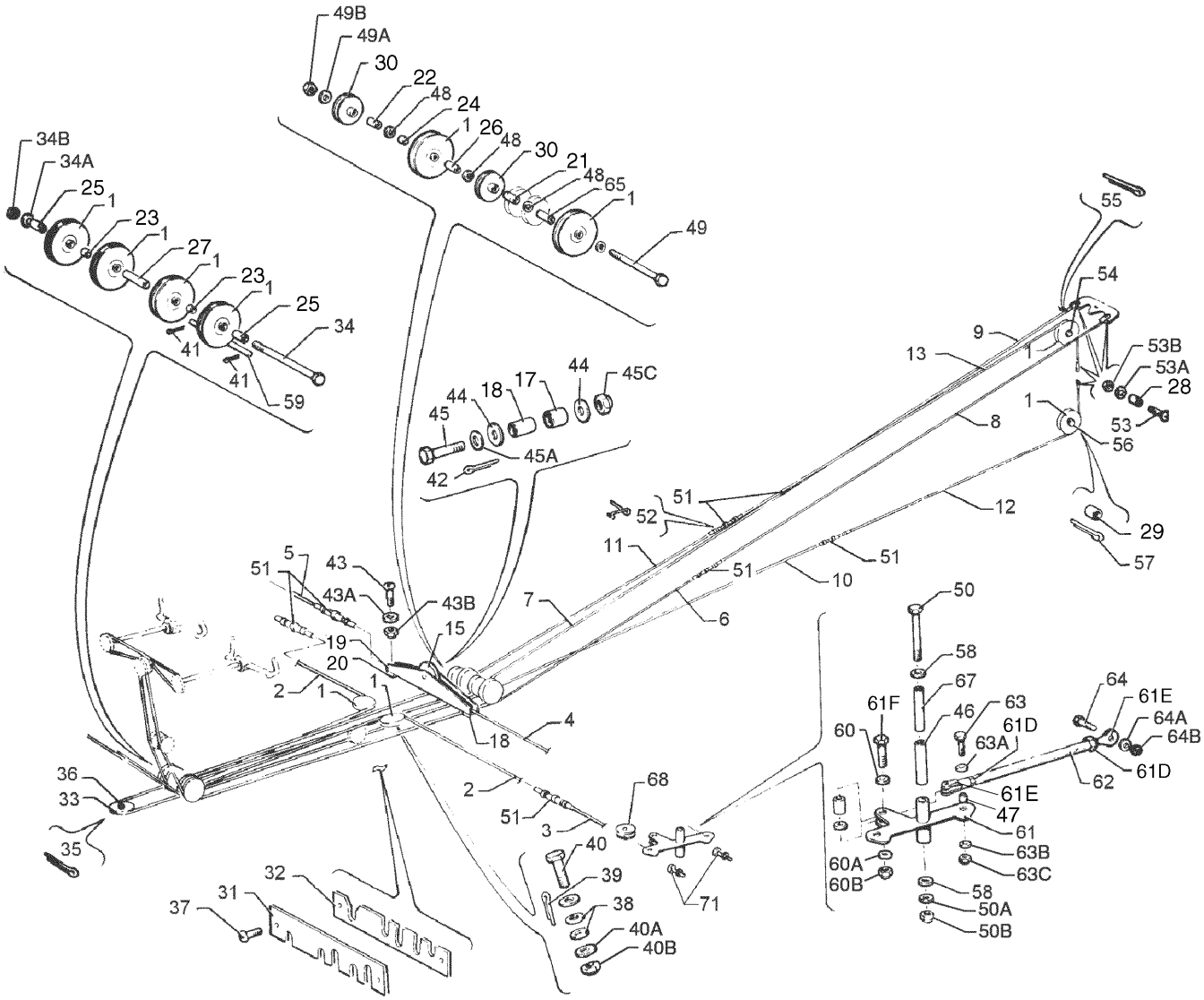


Figure 48. Control System Installation

| Figure and Index Number | Part Number | Nomenclature | No. Req. | Serial Numbers Affected |
|---|---|---|---|---|
| 48- | 35135 (BN) | DRAWING - Control System Installation | | |
| 1 | 41001-010 | PULLEY - 2 3/4 diameter | 11 | |
| 2 | 62701-099 | CABLE - Forward aileron | 2 | |
| 3 | 62701-122 | CABLE - Aileron, wing | 2 | |
| 4 | 62701-123 | CABLE - Aileron balance, left | 1 | |
| 5 | 62701-124 | CABLE - Aileron balance, right | 1 | |
| 6 | 62701-100 | CABLE - Forward rudder, left | 1 | |
| 7 | 62701-100 | CABLE - Forward rudder, right | 1 | |
| 8 | 62701-008 | CABLE - Aft rudder, left | 1 | |
| 9 | 62701-008 | CABLE - Aft rudder, right | 1 | |
| 10 | 62701-113 | CABLE - Forward stabilator, left | 1 | |
| 11 | 62701-114 | CABLE - Forward stabilator, right | 1 | |
| 12 | 62701-012 | CABLE - Aft stabilator, bottom | 1 | |
| 13 | 62701-013 | CABLE - Aft stabilator, top | 1 | |
| -14 | 63955-004 | PULLEY ASSY | 1 | |
| 15 | 62711-002 | PULLEY | 1 | |
| -16 | 63955-005 | . PULLEY ASSY | 1 | |
| 17 | 62713-003 | . . BEARING - Outer | 1 | |
| 18 | 62712-003 | . BEARING - Inner | 1 | |
| 19 | 62700-005 | BRACKET - Pulley | 1 | |
| 20 | 62762-000 | FILLER BLOCK | 2 | |
| 21 | 62714-002 | BEARING - Inner | 1 | |
| 22 | 62714-003 | BEARING - Inner | 1 | |
| -23 | 62743-002 | SPACER - Bushing | 2 | |
| -24 | 62743-003 | SPACER - Bushing | 1 | |
| -25 | 62743-004 | SPACER - Bushing | 2 | |
| -26 | 62743-005 | SPACER - Bushing | 1 | |
| 27 | 62743-006 | SPACER - Bushing | 1 | |
| 28 | 63900-031 | BUSHING | 4 | |
| 29 | 63900-037 | BUSHING - Stabilator pulley | 2 | |
| 30 | 63955-003 | PULLEY | 4 | |
| 31 | 62768-000 | FAIRLEAD | 1 | |
| 32 | 62769-000 | FAIRLEAD | 1 | |
| 33 | 481-652 | PULLEY - (MS20220-21) | 1 | |
| 34 | 401-385 | BOLT - (AN5-64A) | 1 | |
| 34A | 690-628 | WASHER - (NAS1149F0563P) | 3 | |
| 34B | 404-531 | NUT - (MS21042-5) | 1 | |
| 35 | 424-054 | COTTER PIN - (MS24665-140) | 2 | |
| 36 | 401-353 | BOLT - (AN5-12A) | 1 | |
| -36A | 690-628 | WASHER - (NAS1149F0563P) | 1 | |
| -36B | 404-531 | NUT - (MS21042-5) | 1 | |
| 37 | 415-521 | SCREW - (MS35206-231) | 2 | |
| 38 | 690-619 | WASHER - (NAS1149F0532P) | 4 | |
| 39 | 424-052 | COTTER PIN - (MS24665-134) | 4 | |
| 40 | 401-188 | BOLT - (AN5-10A) | 2 | |
| 40A | 690-628 | WASHER - (NAS1149F0563P) | 2 | |
| 40B | 404-531 | NUT - (MS21042-5) | 2 | |
| 41 | 424-051 | COTTER PIN - (MS24665-132) | 2 | |
| 42 | 424-055 | COTTER PIN - (MS24665-138) | 1 | |
| 43 | 401-266 | BOLT - (AN3-5A) | 2 | |
| 43A | 690-612 | WASHER - (NAS1149F0363P) | 2 | |
| 43B | 404-526 | NUT - (MS21042-3) | 2 | |
| 44 | 690-628 | WASHER - (NAS1149F0563P) | 2 | |
| 45 | 400-008 | BOLT - (AN4-13A) | 1 | |

-ITEM NOT ILLUSTRATED

When ordering, always specify Part Number, Description, and Serial Number of Aircraft

| Figure and Index Number | Part Number | Nomenclature | No. Req. | Serial Numbers Affected |
|---|---|---|---|---|
| 48- | | | | |
| 45A | 690-611 | WASHER - (NAS1149F0463P) | 1 | |
| -45B | 690-613 | WASHER - (NAS1149F0432) | 1 | |
| 45C | 404-530 | NUT - (MS21042-4) | 1 | |
| 46 | 63882-068 | BUSHING - Aileron bellcrank | 2 | 2843001 thru 2843590 |
| 47 | 35614-016 | BUSHING ASSY | 2 | 2843591 and up |
| 48 | 690-629 | WASHER - (NAS1149F0663P) | 4 | |
| 49 | 401-378 | BOLT - (AN5-53A) | 1 | |
| 49A | 690-628 | WASHER - (NAS1149F0663P) | 3 | |
| 49B | 404-531 | NUT - (MS21042-5) | 1 | |
| 50 | 401-289 | BOLT - (AN3-63A) | 1 | |
| 50A | 690-612 | WASHER - (NAS1149FN363P) | 1 | |
| 50B | 404-526 | NUT - (MS21042-3) | 1 | |
| 51 | 489-910 | BARREL - Turnbuckle (MS21251-B5S) | 7 | |
| 52 | 554-979 | CLIP - (MS21256-1) | 14 | |
| 53 | 400-674 | BOLT - Clevis (AN23-12) | 4 | |
| 53A | 690-612 | WASHER - (NAS1149F0363P) | 4 | |
| 53B | 404-392 | NUT - (AN320-3) | 4 | |
| -53C | 424-051 | COTTER PIN - (MS24665-132) | 4 | |
| 54 | 401-188 | BOLT - (AN5-10A) | 1 | |
| -54A | 690-628 | WASHER - (NAS1149F0563P) | 1 | |
| -54B | 404-531 | NUT - (MS21042-5) | 1 | |
| 55 | 424-053 | COTTER PIN - (MS24665-136) | 1 | |
| 56 | 401-354 | BOLT - (AN5-13A) | 1 | |
| -56A | 690-628 | WASHER - (NAS1149F0563P) | 1 | |
| -56B | 404-531 | NUT - (MS21042-5) | 1 | |
| 57 | 424-054 | COTTER PIN - (MS24665-140) | 1 | |
| 58 | 494-103 | WASHER - Bellcrank - (97322) | 4 | |
| 59 | 62710-002 | PIN - Cable guard | 1 | |
| 60 | 690-612 | WASHER - (NAS1149F0363P) | 2 | |
| 60A | 690-609 | WASHER - (NAS1149F0332P) | 2 | |
| 60B | 404-392 | NUT - (AN320-3) | 2 | |
| -60C | 424-051 | COTTER PIN - (MS24665-132) | 2 | |
| 61 | 35614-008 | BELLCRANK ASSY - Aileron, left | 1 | 2843001 thru 2843590 |
| -61A | 35614-009 | BELLCRANK ASSY - Aileron, right | 1 | 2843001 thru 2843590 |
| -61B | 35614-012 | BELLCRANK ASSY - Aileron, left | 1 | 2843591 and up |
| -61C | 35614-013 | BELLCRANK ASSY - Aileron, right | 1 | 2843591 and up |
| 61D | 404-322 | . NUT - Lock (AN316-4R) | 2 | |
| 61E | 452-335 | . BEARING - Rod end | 4 | |
| 61F | 400-678 | . BOLT - (AN23-16) | 2 | |
| 62 | 35476-001 | . ROD ASSY - Aileron | 2 | |
| 63 | 402-669 | BOLT - (NAS1103-7D) | 4 | |
| 63A | 690-612 | WASHER - (NAS1149F0363P) | 4 | |
| 63B | 690-609 | WASHER - (NAS1149F0332P) | 4 | |
| 63C | 404-945 | NUT - (MS17826-3) | 4 | |
| -63D | 424-051 | COTTER PIN - (MS24665-132) | 4 | |
| 64 | 401-270 | BOLT - (AN3-11A) | 2 | |
| 64A | 690-612 | WASHER - (NAS1149F0363P) | 6 | |
| 64B | 404-526 | NUT - (MS21042-3) | 1 | |
| 65 | 62743-008 | SPACER - Bushing | 1 | |
| 67 | 65003-057 | BUSHING - Aileron bellcrank | 2 | 2843001 thru 2843590 |
| 68 | 41001-010 | PULLEY - 2 3/4 diameter | 1 | |
| -68A | 400-155 | BOLT - (AN5-10) | 2 | |
| -68B | 690-619 | WASHER - (NAS1149F0532P) | 3 | |
| -68C | 404-102 | NUT - (AN310-5) | 2 | |
| -68D | 424-053 | COTTER PIN - (MS24665-136) | 2 | |

-ITEM NOT ILLUSTRATED

When ordering, always specify Part Number, Description, and Serial Number of Aircraft

| Figure and Index Number | Part Number | Nomenclature | No. Req. | Serial Numbers Affected |
|---|---|---|---|---|
| 48- | | | | |
| 71 | 66614-000 | STOP - Aileron bellcrank | 4 | |
| -71A | 404-224 | NUT - (AN315-3R) | 4 | |
| -73B | DELETED | | | |

-ITEM NOT ILLUSTRATED

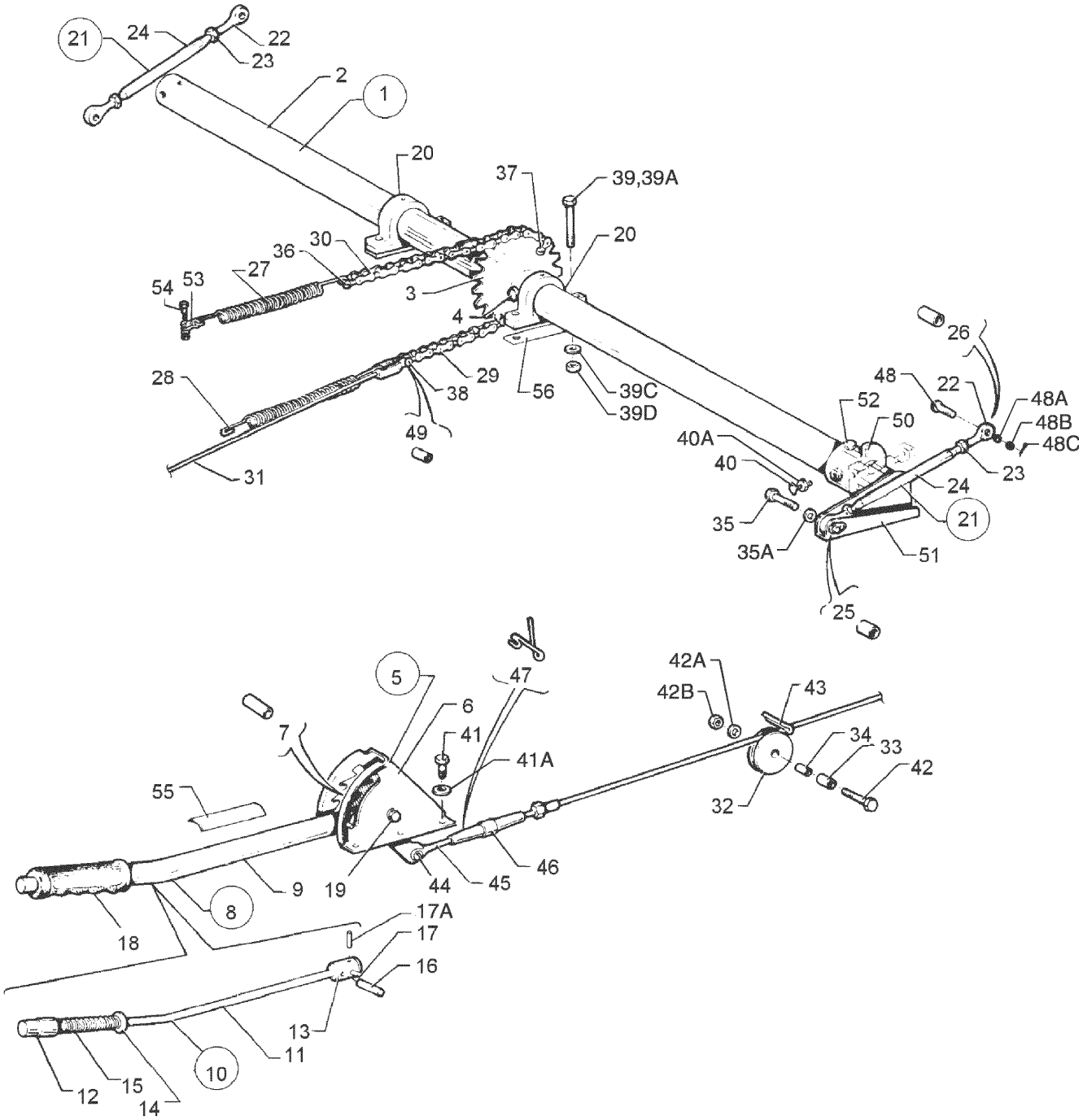


Figure 49. Flap Control Installation

| Figure and Index Number | Part Number | Nomenclature | No. Req. | Serial Numbers Affected |
|---|---|---|---|---|
| 49- | 35135 (BN) | DRAWING - Control System Installation | | |
| 1 | 62705-000 | FLAP TORQUE TUBE ASSY - Complete | 1 | |
| 2 | 62725-000 | . TORQUE TUBE - Flap | 1 | |
| 3 | 62789-002 | . SPROCKET ASSY - Flap torque tube | 1 | |
| 4 | 400-011 | . BOLT - (AN4-16A) | 2 | |
| -4A | 690-611 | . WASHER - (NAS1149F0463P) | 2 | |
| -4B | 404-530 | . NUT - (MS21042-4) | 2 | |
| 5 | 62706-006 | LEVER ASSY - Flap control | 1 | |
| 6 | 65654-006 | . BRACKET ASSY - Flap lever | 1 | |
| 7 | 62740-000 | . BUSHING - Flap lever | 1 | |
| 8 | 63782-004 | . HANDLE ASSY - Flap lever | 1 | |
| 9 | 63781-008 | . . TUBE ASSY - Flap lever | 1 | |
| 10 | 63391-003 | . . PLUNGER ASSY - Flap lever | 1 | |
| 11 | 63391-002 | . . . TUBE - Plunger | 1 | |
| 12 | 62733-000 | . . . PLUG - Plunger, upper | 1 | |
| 13 | 62734-002 | . . . PLUG - Plunger, lower (.252 pin hole) | 1 | |
| 14 | 62736-000 | . . . WASHER | 1 | |
| 15 | 50111-000 | . . . SPRING | 1 | |
| 16 | 480-696 | . . . PIN - Roll - (59-022-094-0625) | 2 | |
| 17 | 63782-003 | . . PIN - Solid (.250 diameter) | 1 | |
| 17A | 480-698 | . . PIN - Roll (5/8 long) - (59-012-062-0625) | 1 | |
| 18 | 63779-000 | . . GRIP - Flap lever | 1 | |
| -18A | 15086-000 | . . SCREW | 2 | |
| 19 | 401-274 | . BOLT - (AN3-15A) | 1 | |
| -19A | 690-612 | . WASHER - (NAS1149F0363P) | 2 | |
| -19B | 404-526 | . NUT - (MS21042-3) | 1 | |
| 20 | 35402-000 | CLAMP ASSY - Torque shaft support | 2 | |
| 21 | 62764-000 | ROD ASSY - Flap tube | 2 | |
| 22 | 452-335 | . BEARING | 1 | |
| -22A | 452-336 | . BEARING | 1 | |
| 23 | 404-322 | . NUT - (AN316-4R) | 1 | |
| -23A | 404-320 | . NUT - (AN316-4L) | 1 | |
| -24 | 62764-002 | . TUBE - Flap | 1 | |
| -25 | 63900-038 | BUSHING - Flap bellcrank | 2 | |
| -26 | 63900-039 | BUSHING - Flap rod end | 2 | |
| 27 | 62820-000 | SPRING - Flap return | 1 | |
| 28 | 62821-000 | SPRING - Flap cable tension | 1 | |
| 29 | 62858-003 | CHAIN - (length 8.5) | 1 | |
| 30 | 62858-004 | CHAIN - (length 6.0) | 1 | |
| 31 | 62701-101 | CABLE ASSY - Flap | 1 | |
| 32 | 63955-004 | PULLEY - Flap | 1 | |
| 34 | 62712-002 | BEARING - Inner | 1 | |
| 35 | 400-443 | BOLT - (AN3-12A) | 2 | |
| 35A | 690-612 | WASHER - (NAS1149F0363P) | 2 | |
| 36 | 400-652 | BOLT - (AN21-8) | 1 | |
| -36A | 690-640 | WASHER - (NAS1149FN632P) | 1 | |
| -36B | 404-391 | NUT - (AN320-1) | 1 | |
| -36C | 424-041 | COTTER PIN - (MS24665-5) | 1 | |
| 37 | 400-653 | BOLT - Clevis (AN21-9) | 2 | |
| -37A | 690-640 | WASHER - (NAS1149FN632P) | 4 | |
| -37B | 404-391 | NUT - (AN320-1) | 2 | |
| -37C | 424-041 | COTTER PIN - (MS24665-5) | 2 | |
| 38 | 400-653 | BOLT - Clevis (AN21-9) | 1 | |
| -38A | 404-391 | NUT - (AN320-1) | 1 | |

-ITEM NOT ILLUSTRATED

When ordering, always specify Part Number, Description, and Serial Number of Aircraft

| Figure and Index Number | Part Number | Nomenclature | No. Req. | Serial Numbers Affected |
|---|---|---|---|---|
| 49- | | | | |
| -38B | 424-041 | COTTER PIN - (MS24665-5) | 1 | |
| 39 | 400-440 | BOLT - (AN3-6A) | 4 | |
| 39A | 400-441 | BOLT - (AN3-7A) (SEE NOTE 1) | 4 | |
| -39B | 690-612 | WASHER - (NAS1149F0363P) | 4 | |
| 39C | 690-612 | WASHER - (NAS1149F0363P) | 12 | |
| 39D | 404-526 | NUT - (MS21042-3) | 4 | |
| 40 | 411-538 | SCREW - (MS35207-269) | 2 | |
| 40A | 404-224 | NUT - (AN315-3R) | 2 | |
| 41 | 400-438 | BOLT - (AN3-4A) | 6 | |
| 41A | 690-612 | WASHER - (NAS1149F0363P) | 6 | |
| -41B | 404-526 | NUT - (MS21042-3) | 6 | |
| 42 | 400-004 | BOLT - (AN4-7A) | 1 | |
| 42A | 690-611 | WASHER - (NAS1149F0463P) | 1 | |
| 42B | 404-530 | NUT - (MS21042-4) | 1 | |
| 43 | 424-052 | COTTER PIN - (MS24665-134) | 1 | |
| 44 | 400-673 | BOLT - Clevis (AN23-11) | 1 | |
| -44A | 690-612 | WASHER - (NAS1149F0363P) | 1 | |
| -44B | 63900-174 | BUSHING | 1 | |
| -44C | 404-392 | NUT - (AN320-3) | 1 | |
| -44D | 424-051 | COTTER PIN - (MS24665-132) | 1 | |
| 45 | 461-136 | FORK - (NAS645-22RS) | 1 | |
| 46 | 489-910 | BARREL - (MS21251-B5S) | 1 | |
| 47 | 554-979 | CLIP - (MS21256-1) | 2 | |
| 48 | 400-680 | CLEVIS BOLT - (AN23-18) | 2 | |
| 48A | 690-612 | WASHER - (NAS1149F0363P) | 2 | |
| 48B | 404-100 | NUT - Castle (AN310-3) | 2 | |
| 48C | 424-051 | COTTER PIN - (MS24665-132) | 2 | |
| 49 | 82732-076 | BUSHING | 1 | |
| 50 | 62856-000 | FITTING ASSY - Left | 1 | |
| -50A | 62856-001 | FITTING ASSY - Right | 1 | |
| 51 | 62727-000 | TUBE ASSY - Flap torque tube, left | 1 | |
| -51A | 62727-001 | TUBE ASSY - Flap torque tube, right | 1 | |
| 52 | 401-318 | BOLT - (AN4-20A) | 4 | |
| -52A | 690-611 | WASHER - (NAS1149F0463P) | 4 | |
| -52B | 404-530 | NUT - (MS21042-4) | 4 | |
| 53 | 486-563 | SHACKLE - (AN115-16) | 1 | |
| 54 | 401-266 | BOLT - (AN3-5A) | 1 | |
| -54A | 690-612 | WASHER - (NAS1149F0363P) | 1 | |
| -54B | 404-526 | NUT - (MS21042-3) | 1 | |
| 55 | 35669-027 | PLACARD - Flap lever (See Figure 72) | 1 | |
| 56 | 35402-004 | SHIM - Torque shaft support | AR | |
| -57 | 690-640 | WASHER - (NAS1149FN632P) | 4 | |

NOTES:

1. USED IF TWO OR MORE TORQUE SHAFT SUPPORT SHIMS, 35402-04, ARE INSTALLED WITH EACH TORQUE SHAFT SUPPORT CLAMP ASSY.

-ITEM NOT ILLUSTRATED

THIS PAGE INTENTIONALLY LEFT BLANK

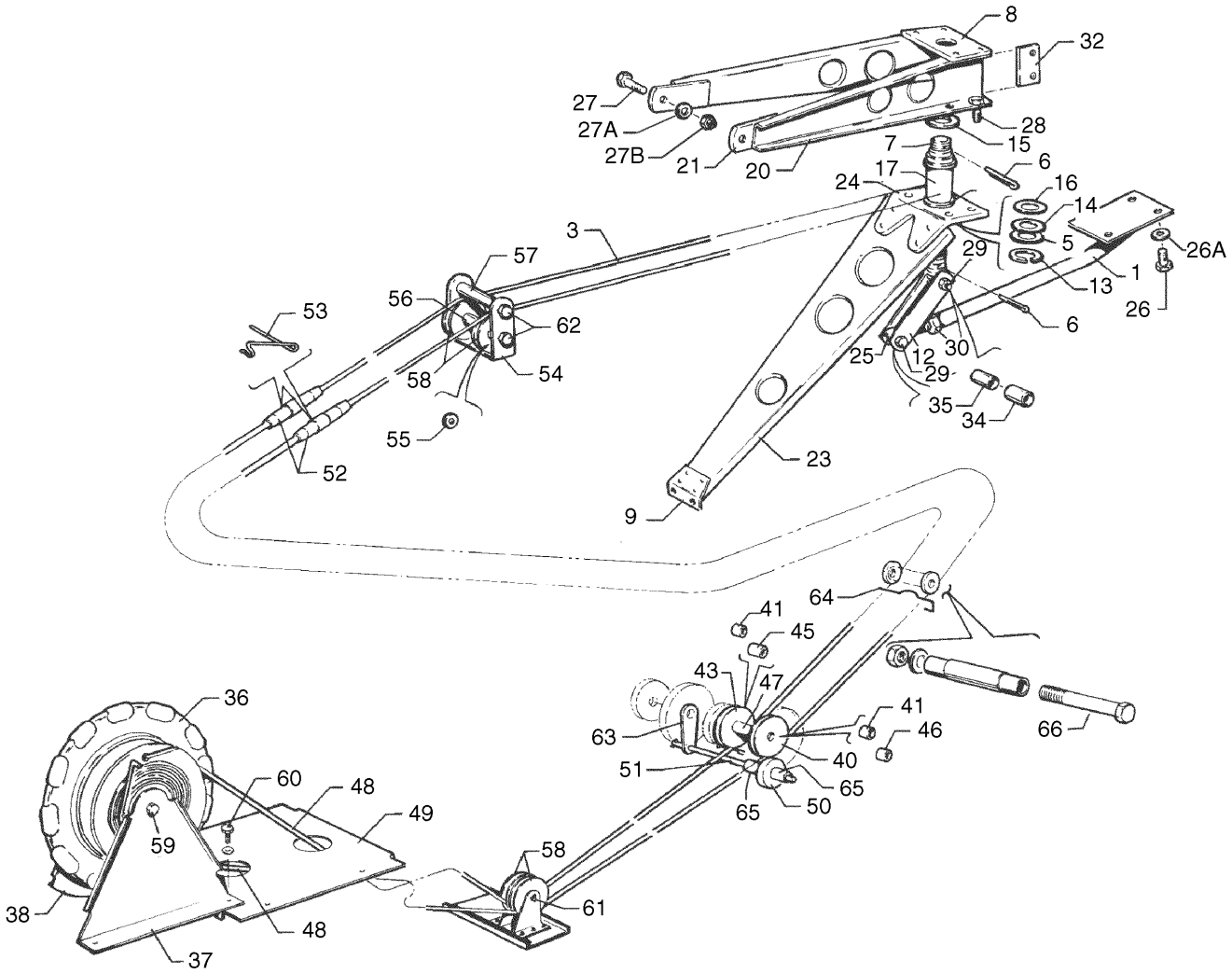


Figure 50. Stabilator Trim Installation

| Figure and Index Number | Part Number | Nomenclature | No. Req. | Serial Numbers Affected |
|---|---|---|---|---|
| 50- | 35135 (BN) | DRAWING - Control System Installation | | |
| | 65258 (S) | DRAWING - Stabilator Trim Installation | | |
| 1 | 65248-000 | ARM ASSY - Stabilator trim | 1 | |
| -2 | 65258-013 | SUPPORT ASSY | 1 | |
| 3 | 62701-047 | . CABLE - Stabilator trim, aft | 1 | 2843001 thru 2843308 |
| 3 | 62701-216 | . CABLE - Stabilator trim, aft | 1 | 2843309 and up |
| -4 | 690-612 | . WASHER - (NAS1149F0363P) | 4 | |
| 5 | 690-623 | . WASHER - (NAS1149C1232R) | 1 | |
| 6 | 424-123 | . COTTER PIN - (MS24665-368) | 2 | |
| 7 | 65246-000 | . SHAFT - Stabilator trim | 1 | |
| 8 | 65249-002 | . PLATE - Stabilator trim | 1 | |
| 9 | 65252-000 | . CLIP - Stabilator trim | 1 | |
| -10 | 690-612 | . WASHER - (NAS1149F0363P) | 2 | |
| -11 | 404-526 | . NUT - (MS21042-3) | 4 | |
| 12 | 65253-000 | . LINK - Stabilator trim | 2 | |
| 13 | 484-747 | . SNAP RING - (5108-75) | 1 | |
| 14 | 452-418 | . BEARING - Thrust - (KZ03002) | 1 | |
| 15 | 452-413 | . BEARING - (KZ02902) | 2 | |
| 16 | 62833-018 | . SHIM - Stabilator trim | 1 | |
| 17 | 63530-000 | . BARREL - Stabilator trim | 1 | |
| -18 | 404-526 | . NUT - (MS21042-3) | 1 | |
| -19 | 65258-004 | . RIB ASSY | 2 | |
| 20 | 65244-000 | . . RIB - Stabilator trim | 2 | |
| 21 | 65251-000 | . . TAB - Stabilator trim | 2 | |
| -22 | 65258-009 | . RIB ASSY | 1 | |
| 23 | 65245-000 | . . RIB - Stabilator trim | 1 | |
| -24 | 65250-002 | . . CLIP - Stabilator trim | 1 | |
| -25 | 65254-000 | BOLT - Eye, stabilator trim | 1 | |
| -26 | 400-437 | BOLT - (AN3-3A) | 4 | |
| -26A | 690-609 | WASHER - (NAS1149F0332P) | 4 | |
| 27 | 401-266 | BOLT - (AN3-5A) | 2 | |
| 27A | 494-066 | WASHER - (K19001-3) | 2 | |
| 27B | 406-551 | NUT - (H19000-3) | 2 | |
| 28 | 400-438 | BOLT - (AN3-4A) | 2 | |
| -28A | 690-612 | WASHER - (NAS1149F0363P) | 4 | |
| -28B | 404-526 | NUT - (MS21042-3) | 3 | |
| 29 | 401-269 | BOLT - (AN3-10A) | 1 | |
| 30 | 404-325 | NUT - (AN316-7R) | 1 | |
| -31 | 400-437 | BOLT - (AN3-3A) | 4 | |
| 32 | 68491-000 | GUARD - Cable | 2 | |
| -33 | 65258-005 | BUSHING ASSY | 1 | |
| 34 | 63882-009 | . SLEEVE - Stabilator trim link | 2 | |
| 35 | 65003-006 | . BUSHING - Stabilator trim link | 2 | |
| 36 | 68414-003 | WHEEL ASSY - Trim tab | 1 | |
| 37 | 65633-000 | BRACKET ASSY - Trim tab | 1 | |
| 38 | 65635-000 | BRACKET - Trim tab | 1 | |
| 40 | 62711-003 | . PULLEY - Trim tab | 1 | |
| 41 | 62715-002 | . BUSHING - Trim tab | 2 | |
| 43 | 62711-003 | . PULLEY - Trim tab | 1 | |
| 45 | 62714-002 | BUSHING - Trim tab | 1 | |
| 46 | 62714-004 | BUSHING - Trim tab | 1 | |
| 47 | 62743-008 | SPACER - Stabilator trim pulley | 1 | |
| 48 | 62701-104 | CABLE - Stabilator trim, forward | 2 | |
| 49 | 65632-003 | PLATE ASSY - Trim wheel | 1 | |

-ITEM NOT ILLUSTRATED

When ordering, always specify Part Number, Description, and Serial Number of Aircraft

| Figure and Index Number | Part Number | Nomenclature | No. Req. | Serial Numbers Affected |
|---|---|---|---|---|
| 50- | | | | |
| 50 | 65639-000 | GUARD - Trim pulley | 1 | |
| 51 | 62710-003 | PIN - Cable guard | 1 | |
| 52 | 489-873 | BARREL - Turnbuckle (MS21251-B2S) | 2 | |
| 53 | 554-979 | CLIP - Turnbuckle safety (MS21256-1) | 4 | |
| 54 | 68472-000 | BRACKET - Stabilator trim pulley | 1 | |
| 55 | 690-612 | WASHER - (NAS1149FN363P) | 2 | |
| 56 | 63900-056 | BUSHING - Stabilator trim pulley | 1 | |
| 57 | 63900-055 | BUSHING - Stabilator trim pulley | 1 | |
| 58 | 481-640 | PULLEY - (MS24566-1B) | 4 | |
| 59 | 400-450 | BOLT - (AN3-17A) | 1 | |
| -59A | 63900-061 | BUSHING | 1 | |
| -59B | 690-620 | WASHER - (NAS1149F0632P) | 1 | |
| -59C | 690-612 | WASHER - (NAS1149FN363P) | 1 | |
| -59D | 690-609 | WASHER - (NAS1149F0332P) | 2 | |
| -59E | 404-526 | NUT - (MS21042-3) | 1 | |
| -59F | 62833-037 | WASHER | 1 | |
| -59G | 419-520 | SCREW - (AN531-6R8) | 3 | |
| 60 | 400-437 | BOLT - (AN3-3A) | 4 | |
| 61 | 424-180 | PIN - (MS20392-2C23) | 1 | |
| -61A | 424-051 | COTTER PIN - (MS24665-132) | 1 | |
| 62 | 401-279 | BOLT - (AN3-25A) | 2 | |
| -62A | 690-609 | WASHER - (NAS1149F0332P) | 2 | |
| -62B | 404-526 | NUT - (MS21042-3) | 2 | |
| -62C | 404-526 | NUT - (MS21042-3) | 2 | |
| 63 | 62709-000 | GUARD - Pin holder | 1 | |
| 64 | 99856-000 | GUARD - Cable | 1 | |
| 65 | 63900-124 | BUSHING | 1 | |
| -65A | 690-609 | WASHER - (NAS1149F0332P) | 1 | |
| -65B | 424-148 | PIN - (MS20392-1C23) | 1 | |
| 66 | 400-446 | BOLT - (AN3-16A) | 1 | |

-ITEM NOT ILLUSTRATED

THIS PAGE INTENTIONALLY LEFT BLANK

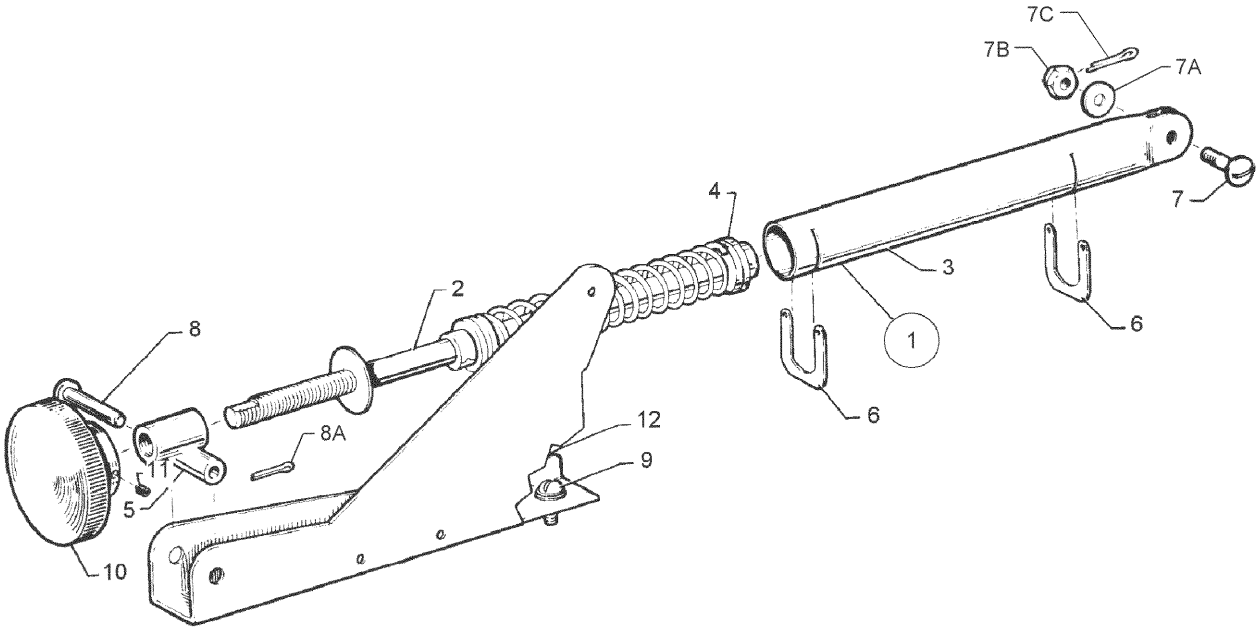


Figure 51. Rudder Trim Mechanism Installation

| Figure and Index Number | Part Number | Nomenclature | No. Req. | Serial Numbers Affected |
|---|---|---|---|---|
| 51- | 65837 (L) | DRAWING - Rudder Trim Installation | | |
| 1 | 65837-002 | ADJUSTMENT ASSY - Rudder trim | 1 | |
| 2 | 62829-003 | . SHAFT ASSY - Rudder trim | 1 | |
| 3 | 65836-000 | . HOUSING ASSY - Rudder trim | 1 | |
| 4 | 62833-127 | . WASHER | 1 | |
| -4A | 62833-144 | . WASHER | 1 | |
| 5 | 62831-000 | . BUSHING ASSY - Rudder trim | 1 | |
| 6 | 62832-000 | . CLIP - Rudder trim | 2 | |
| 7 | 400-672 | BOLT - (AN23-10) | 1 | |
| 7A | 690-609 | WASHER - (NAS1149F0332P) | 1 | |
| 7B | 404-392 | NUT - (AN320-3) | 1 | |
| 7C | 424-051 | COTTER PIN - (MS24665-132) | 1 | |
| 8 | 424-186 | PIN - Flat head - (MS20392-2C35) | 1 | |
| 8A | 424-051 | COTTER PIN - (MS24665-132) | 1 | |
| 9 | 415-544 | SCREW - (MS35206-244) | 2 | |
| -9A | 690-618 | WASHER - (NAS1149FN816P) | 2 | |
| 10 | 62838-000 | KNOB - Rudder trim | 1 | |
| 11 | 419-967 | SCREW - Set - (MS51964-132) | 1 | |
| 12 | 69318-000 | CHANNEL - Rudder trim | 1 | |

-ITEM NOT ILLUSTRATED

When ordering, always specify Part Number, Description, and Serial Number of Aircraft

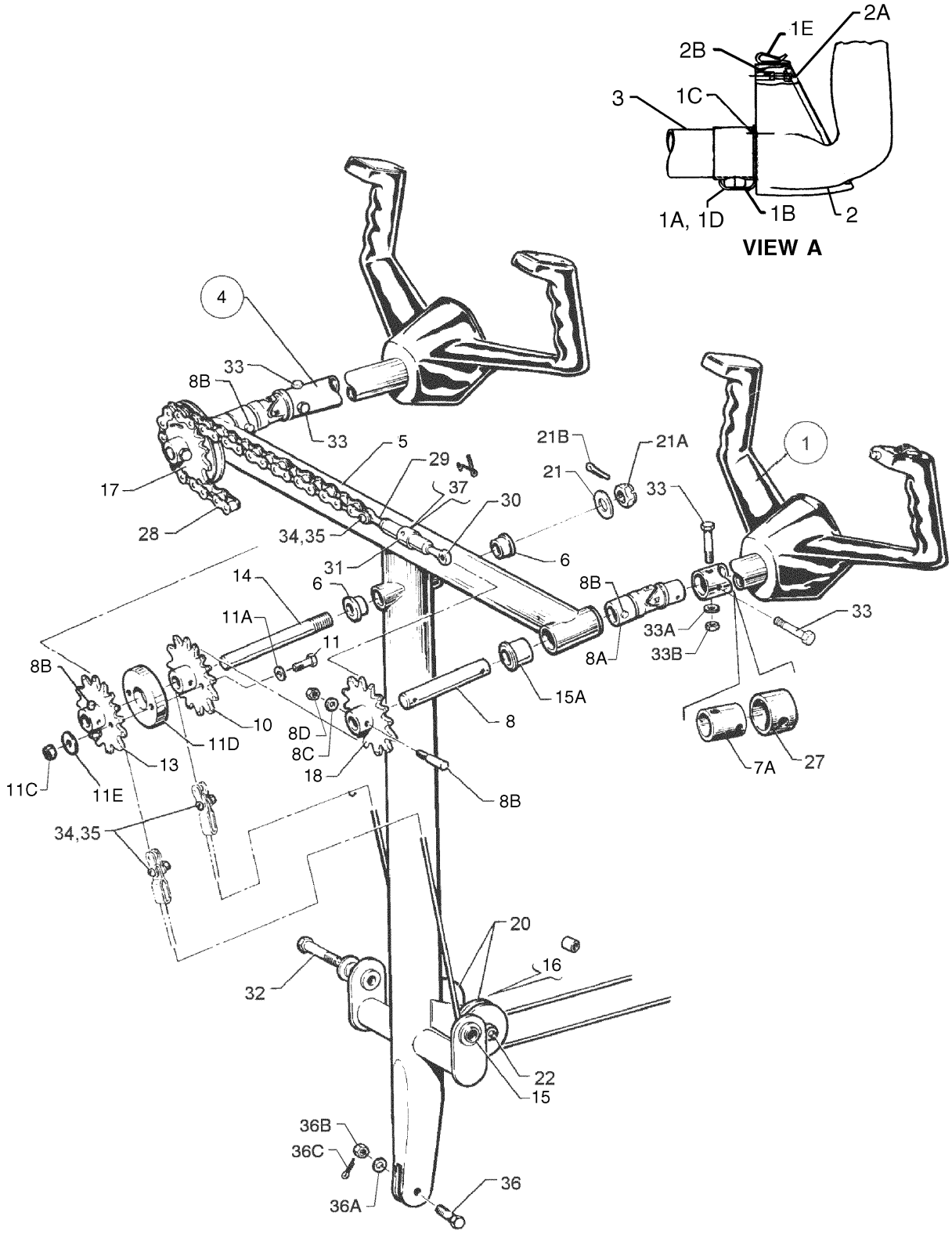


Figure 52. Control Wheel Installation

| Figure and Index Number | Part Number | Nomenclature | No. Req. | Serial Numbers Affected |
|---|---|---|---|---|
| 52- | 35135 (BN) | DRAWING - Control System Installation | | |
| -1 | 85292-009 | WHEEL ASSY - Control, co-pilot (with mic switch) | 1 | 2843001 thru 2843111 |
| 1 | 100572-002 | WHEEL ASSY - Control | 1 | 2843112 and up |
| 1 | 85292-007 | WHEEL ASSY - Control, pilot (with mic switch) | 1 | 2843001 thru 2843111 |
| 1A | 410-047 | . SCREW - (MS24694-S60) | 2 | 2843112 and up |
| | | (Reference Service Bulletin 1139 - latest revision) | | |
| 1B | 104687-002 | . RETAINER CLIP | 2 | 2843112 and up |
| | | (Reference Service Bulletin 1139 - latest revision) | | |
| 1C | 416-390 | . SCREW - (MS24693S40) | 2 | 2843112 and up |
| | | (Reference Service Bulletin 1139 - latest revision) | | |
| 1D | 101118-003 | . SPACER ASSY | 2 | 2843112 thru 2843565 |
| | | (Reference Service Bulletin 1139 - latest revision) | | |
| 1D | 101105-002 | . SPACER | 1 | 2843112 and up |
| 1E | 654-212 | . CLIP - (LP-7000) | 1 | 2843112 and up |
| 2 | 82980-007 | . WHEEL - Control | 1 | 2843001 thru 2843111 |
| 2 | 599-608 | . WHEEL - Control | 1 | 2843112 and up |
| 2A | 474-364 | . MEDALLION | 1 | 2843112 and up |
| 2B | 520-025 | . SCREW - (MS16997-22) | 1 | 2843112 and up |
| 3 | 68558-009 | . TUBE | 1 | 2843001 thru 2843111 |
| 3 | 100571-002 | . TUBE | 1 | 2843112 and up |
| -3A | 85189-006 | . COVER ASSY - Control wheel | 1 | 2843001 thru 2843111 |
| -3B | 553-570 | . PLUG | 1 | 2843001 thru 2843111 |
| -3C | 82974-008 | . CAP | 1 | 2843001 thru 2843111 |
| -3D | 486-079 | . SCREW | 1 | 2843001 thru 2843111 |
| -3E | 553-571 | . CAP - Plug | 1 | 2843001 thru 2843111 |
| -3F | 415-421 | . SCREW | 1 | 2843001 thru 2843111 |
| -3G | 414-690 | . SCREW | 1 | 2843001 thru 2843111 |
| -3H | 82940-003 | . PLUG | 1 | 2843001 thru 2843111 |
| -3J | 82940-002 | . CAP | 1 | 2843001 thru 2843111 |
| -3K | 67321-000 | . PIN | 1 | 2843001 thru 2843111 |
| 4 | 62019-003 | CONTROL COLUMN ASSY | 1 | |
| 5 | 62703-033 | . TEE BAR ASSY - Control column | 1 | |
| 6 | 452-372 | . . BEARING - (KZ03716) | 2 | |
| -6A | 402-757 | . . BOLT - (NAS428-3A7) | 2 | |
| -6B | 404-224 | . . NUT - (AN315-3R) | 2 | |
| -6C | 404-526 | . . NUT - (MS21042-3) | 2 | |
| -6D | 63900-051 | . . BUSHING | 1 | |
| -6E | 62842-000 | . . PLATE | 1 | |
| -7 | 68028-003 | . SHAFT ASSY | 2 | |
| 7A | 68557-000 | . . BUSHING - Control column | 2 | |
| 8 | 62716-007 | . . SHAFT - Control column | 2 | |
| 8A | 62834-002 | . . UNIVERSAL JOINT - Control column | 2 | |
| 8B | 480-730 | . . PIN - (AN386-1-6A) | 5 | |
| 8C | 494-093 | . . WASHER - (AN975-3) | 5 | |
| 8D | 404-526 | . . NUT - (MS21042-3) | 5 | |
| -9 | 63409-002 | . SPROCKET ASSY | 1 | |
| 10 | 62778-000 | . . SPROCKET ASSY - Control column, center rear | 1 | |
| 11 | 401-269 | . . BOLT - (AN3-10A) | 2 | |
| 11A | 690-612 | . . WASHER - (NAS1149F0363P) | 2 | |
| -11B | 690-609 | . . WASHER - (NAS1149F0332P) | 2 | |
| 11C | 404-526 | . . NUT - (MS21042-3) | 2 | |
| 11D | 62782-000 | . . SPACER - Control column | 1 | |
| 11E | 62784-000 | . . WASHER - Control column | 2 | |
| -12 | 63405-002 | . . SHAFT ASSY | 1 | |

-ITEM NOT ILLUSTRATED

When ordering, always specify Part Number, Description, and Serial Number of Aircraft

| Figure and Index Number | Part Number | Nomenclature | No. Req. | Serial Numbers Affected |
|---|---|---|---|---|
| 5B2- | | | | |
| 13 | 63404-000 | . . . SPROCKET - Control column, center front | 1 | |
| 14 | 69077-000 | . . . SHAFT - Control column, center | 1 | |
| 15 | 452-388 | . BEARING - (F4DD) | 2 | |
| 15A | 452-389 | . BEARING - (KZ03137) | 4 | |
| 16 | 62712-004 | . BUSHING - Control column pulley | 2 | |
| 17 | 62845-002 | . SPROCKET ASSY - Control column, right | 1 | |
| 18 | 62839-000 | . SPROCKET ASSY - Control column, left | 1 | |
| 20 | 481-651 | . PULLEY - Control column | 2 | |
| 21 | 690-630 | . WASHER - (NAS1149F0763P) | 1 | |
| 21A | 404-104 | . NUT - (AN310-7) | 1 | |
| 21B | 424-060 | . COTTER PIN - (MS24665-285) | 1 | |
| 22 | 401-333 | . BOLT - (AN4-35A) | 1 | |
| -22A | 690-611 | . WASHER - (NAS1149F0463P) | 4 | |
| -22B | 404-530 | . NUT - (MS21042-4) | 1 | |
| -26C | 553-778 | BUSHING | 2 | |
| 27 | 67193-003 | STOP - Tee bar, left control shaft only | 1 | |
| 28 | 62858-002 | CHAIN - Control | 2 | |
| 29 | 62840-002 | EYE BOLT - Turnbuckle, right | 1 | |
| 30 | 62840-003 | EYE BOLT - Turnbuckle, left | 1 | |
| 31 | 489-910 | BARREL - Turnbuckle (MS21251-B5S) | 2 | |
| 32 | 401-310 | BOLT - (AN4-10A) | 2 | |
| -32A | 62833-085 | WASHER - (O. D. 1.50”) | 2 | |
| -32B | 62833-086 | WASHER - (O. D. .75”) | 2 | |
| -32C | 404-530 | NUT - (MS21042-4) | 2 | |
| 33 | 66546-000 | BOLT - Special | 4 | |
| 33A | 690-609 | WASHER - (NAS1149F0332P) | 4 | |
| 33B | 404-526 | NUT - (MS21042-3) | 4 | |
| 34 | 82732-076 | BUSHING - Control chain | 4 | |
| 35 | 400-653 | BOLT - (AN21-9) | 4 | |
| -35A | 404-391 | NUT - (AN320-1) | 4 | |
| -35B | 424-041 | COTTER PIN - (MS24665-5) | 4 | |
| 36 | 400-056 | BOLT - (AN3-11) | 1 | |
| 36A | 690-612 | WASHER - (NAS1149F0363P) | 1 | |
| 36B | 404-100 | NUT - (AN310-3) | 1 | |
| 36C | 424-051 | COTTER PIN - (MS24665-132) | 1 | |
| 37 | 554-979 | CLIP - Turnbuckle - (MS21256-1) | 2 | |
| -38 | 84549-004 | SWITCH ASSY (MIC) | 1 | 2843001 thru 2843111 |
| -38A | 688-289 | . SWITCH - Microphone | 1 | |

-ITEM NOT ILLUSTRATED

When ordering, always specify Part Number, Description, and Serial Number of Aircraft

THIS PAGE INTENTIONALLY LEFT BLANK

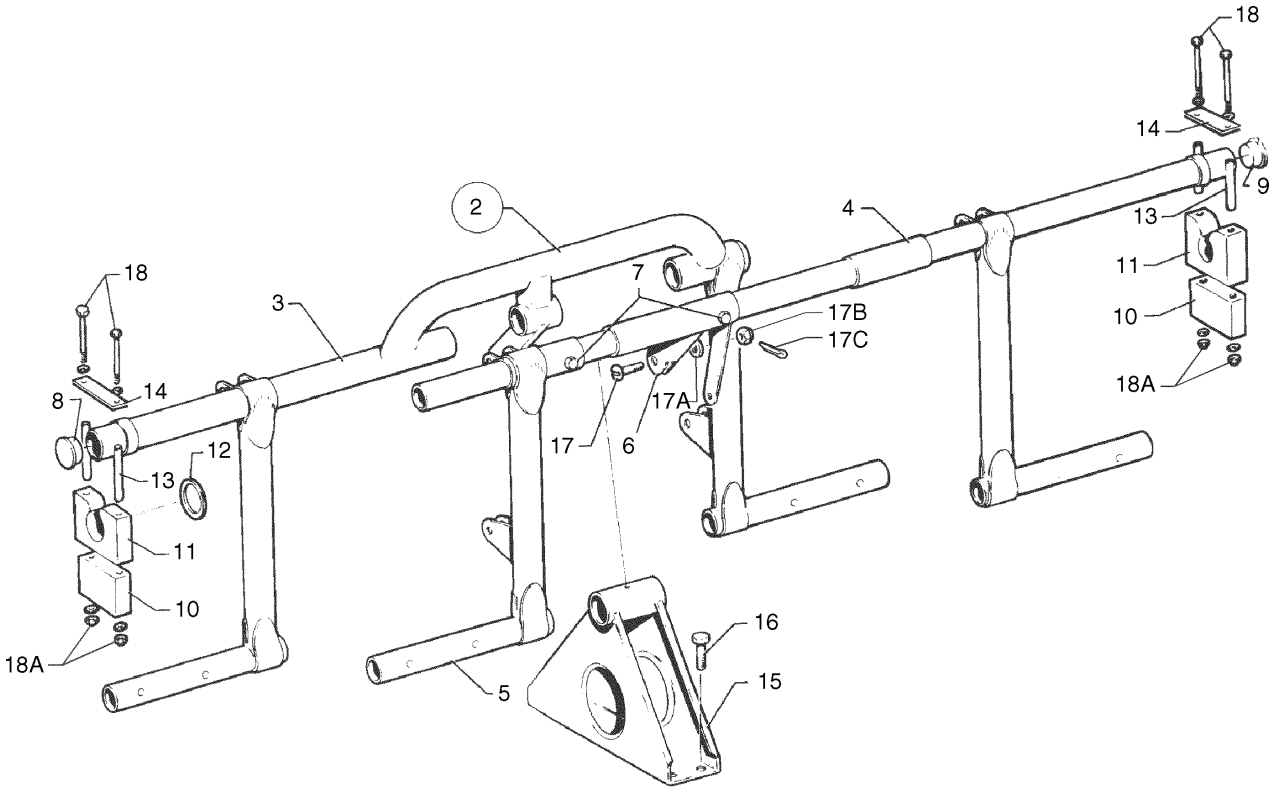


Figure 53. Rudder Pedal Installation

| Figure and Index Number | Part Number | Nomenclature | No. Req. | Serial Numbers Affected |
|---|---|---|---|---|
| 53- | 35135 (BN) | DRAWING - Control System Installation | | |
| -1 | 63473-007 | CYLINDER ASSY - Dual Toe Brake | 1 | |
| 2 | 63459-019 | RUDDER PEDAL ASSY - Complete | 1 | |
| 3 | 63420-008 | . PEDAL AND BAR ASSY | 1 | |
| 4 | 63419-000 | . PEDAL AND BAR ASSY | 1 | |
| 5 | 63458-005 | . PEDAL AND BAR ASSY | 1 | |
| 6 | 66661-000 | . ARM ASSY - Connector | 1 | |
| 7 | 402-314 | . BOLT - (AN174-13A) | 2 | |
| -7A | 690-611 | . WASHER - (NAS1149F0463P) | 2 | |
| -7B | 404-530 | . NUT - (MS21042-4) | 2 | |
| 8 | 581-330 | . PLUG - Rudder pedal assy | 1 | |
| 9 | 581-332 | . PLUG - Rudder pedal assy | 1 | |
| 10 | 63456-000 | BLOCK - Rudder bar support, bottom | 2 | |
| 11 | 65050-000 | BLOCK - Rudder bar support, top | 2 | |
| 12 | 62833-017 | WASHER - Rudder bar support | 2 | |
| 13 | 65003-003 | BUSHING - Rudder bar support | 4 | |
| 14 | 63455-000 | PLATE - Rudder bar support | 6 | |
| 15 | 63451-000 | SUPPORT ASSY - Rudder bar | 1 | |
| 16 | 400-438 | BOLT - (AN3-4A) | 4 | |
| 17 | 400-672 | BOLT - (AN23-10) | 2 | |
| 17A | 690-612 | WASHER - (NAS1149FN363P) | 2 | |
| 17B | 404-392 | NUT - (AN320-3) | 2 | |
| 17C | 424-051 | COTTER PIN - (MS24665-132) | 2 | |
| 18 | 400-456 | BOLT - (AN3-31A) | 4 | |
| 18A | 404-526 | NUT - (MS21042-3) | 4 | |

-ITEM NOT ILLUSTRATED

When ordering, always specify Part Number, Description, and Serial Number of Aircraft

**GRIDS 1I22 THRU 1L24**
**INTENTIONALLY LEFT BLANK**

# AIRPLANE PARTS CATALOG

## ARCHER III

**PA-28-181**
**(SERIAL NUMBERS 2843001 AND UP)**

## CARD 2 OF 2

# PIPER AIRCRAFT, INC.

**PART NUMBER: 761-898**

**REVISED: JUNE 10, 2007**



Island Enterprises

Published by
Technical Publications Group

©Piper Aircraft, Inc.
2926 Piper Drive
Vero Beach, Florida 32960
U.S.A.

Member of GAMA
General Aviation
Manufacturers Association

**2A2**

Island Enterprises

AEROFICHE EXPLANATION AND REVISION STATUS

The Parts Catalog information in this set of Aerofiche cards is arranged in accordance with general specifications of Aerofiche adopted by the General Aviation Manufacturer's Association.

Conversion of Aerofiche alpha/numeric code numbers:
First number is the Aerofiche card identifier.
Letter is the horizontal line reference per card.
Second number is the vertical line reference per card.
Example: 2J16 = Aerofiche card number two of given set, Grid location J16.

REVISIONS

The information compiled in this Aerofiche Parts Catalog is kept current by revisions distributed periodically. Each revision is a complete Aerofiche card replacement and supersedes Aerofiche cards of the same number in the set.

Revisions to this PA-28-181 (serial numbers 2843001 and up) Parts Catalog issued July 10, 2004 are as follows:

| Effectivity | Publication Date | Aerofiche Card Effectivity |
|---|---|---|
| ORG 979001 | September 1, 1997 | 1 and 2 |
| PR 990923 | September 23, 1999 | 1 and 2 |
| PR 030310 | March 10, 2003 | 1 and 2 |
| CR 040710 | July 10, 2004 | 1 and 2 |
| PR 050610 | June 10, 2005 | 1 and 2 |
| PR 050910 | September 10, 2005 | 1 and 2 |
| PR 051210 | December 10, 2005 | 1 and 2 |
| PR 060910 | September 10, 2006 | 1 and 2 |
| CR061210 | December 10, 2006 | 1 and 2 |
| PR070310 | March 10, 2007 | 1 and 2 |
| PR070610* | June 10, 2007 | 1 and 2 |

* Please replace your existing Aerofiche cards dated 03/10/07 with these two aerofiche cards dated 06/10/07.

THIS PAGE INTENTIONALLY LEFT BLANK

# INTRODUCTION

This illustrated Parts Catalog provides simple, positive identification of replacement parts for the Model PA-28-181 Archer III (serial numbers 2843001 and up), manufactured by the Piper Aircraft, Inc. of Vero Beach, Florida.

**NOTE:** DO NOT USE THIS CATALOG FOR RIGGING AND INSTALLATION PURPOSES.

1. The catalog is divided into fourteen major sections as follows:
   a. Section I to XIII inclusive contains all replacement parts for the complete airplane. Each section is subdivided and each division includes an illustration and a parts listing.
   b. Section XIV is the Miscellaneous Group. This group includes an illustration and parts list for the Placards and Exterior Stencils, a listing of the Optional Equipment Kits, Repair kits and Special Tools, and a listing of Miscellaneous Hardware and Consumables.

2. The following is a brief explanation of the columns in the parts lists: (Refer to EXAMPLE below).
   a. The FIGURE AND ITEM NUMBER column indicates the illustration figure number and its part index number. EXAMPLE: (2-1), the 2 is the figure number and the 1 is the index number. The figure number appears only at the top of each parts list page.
   b. The PART NUMBER column contains the identifying number of the replacement part and this number must be shown on all parts orders.
   c. The NOMENCLATURE column indicates the part name. This name must be shown on all parts orders.
   d. The UNITS PER ASSY. (Number Required) column represents the total quantity of parts used per figure when the part is not indented and the quantity of parts used per assembly when the part is indented. The symbol AR listed in this column means As Required.
   e. The EFFECT FROM TO column indicates the part application by airplane serial number.

**EXAMPLE**

| Figure and Index Number | Part Number | Nomenclature | No. Req. | Serial Numbers Affected |
|---|---|---|---|---|
| 2 1 | XXXXX-XXX | DOOR ASSEMBLY - Baggage compartment | X | XXXXXXX and up |
| 2 | XXXXX-XXX | . TUBE ASSEMBLY - Baggage door latch | X | |
| 3 | XXXXX-XXX | . . CLEVIS - Door latch tube assembly | X | |
| 4 | XXXXX-XXX | . . CLIP - Door latch tube assembly | X | |

In the nomenclature column, the next higher assembly relationship of items covered is shown by the degree of indention of each item and is indicated by an asterisk (*). One asterisk signifies one indention, two signifies two indentions, etc. The example listing above is interpreted as follows:

If the DOOR ASSEMBLY (not indented) is ordered, it will include the three items indented under the DOOR ASSEMBLY.

If the TUBE ASSEMBLY (indented one space) is ordered, it will include the two items indented under the TUBE ASSEMBLY.

If you want only a CLEVIS or CLIP, you order only that item.

3. Piper will supply all attaching parts to its customers in any quantity. When purchasing the attaching parts such as nuts, bolts, washers, cotter pins, etc. from Piper, the customer or service center need only order the part(s) needed.
4. All items of Optional Equipment are contained in the parts list in their proper sequence and sections. These items were not marked optional, since they are fully identified by their descriptions.

## HOW TO IDENTIFY A PART IF YOU KNOW WHAT IT LOOKS LIKE AND KNOW WHERE IT IS LOCATED

1. Refer to Figure 1 to determine the section number in which the part is used.
2. Refer to the Table of Contents and locate the section. Note the figure numbers that illustrate the various subgroups of this main section. Select the figure title you think might contain the part you wish to identify and proceed to the grid (page) specified. If you don't find the part on this illustration, try another figure in this group.
3. Refer to Figure and Index Number in the parts listing for description of the part.

## HOW TO ORDER PARTS

When ordering parts for your Piper airplane, please observe the following instructions:

1. Place your order with your local distributor or service center.
2. Specify the model and serial number of your airplane.
3. Specify Part Number, Name, Type and Quantity Required.
4. Specify the method of shipment — freight, express, parcel post, air express, air freight or air parcel post. Where the nature of the shipment requires it or when no instructions are given, we reserve the right to ship the most suitable way.
5. Request price and delivery information prior to order placement.

## GENERAL INFORMATION

1. Shortages
   All orders are checked before leaving our Shipping Department. A packing slip is enclosed with the shipment. Claims for errors or shortages must be made within three days after receipt of orders.

2. Returned Goods
   No material should be returned without first securing written permission. Material sent in without notice will be held at the owner's risk for thirty days and will then be disposed of as we see fit.

   Transportation charges must be prepaid on returned goods or the shipment will be refused.

3. Transportation Liabilities
   Piper Aircraft, Inc. cannot be held liable for damages to parts in transit from the factory. If a shipment is received in a damaged condition, have the delivery man or transportation company make a notation of the damage and file your claim with the carrier. In case of concealed damage, do not attempt to remove the part from the shipping container, or try to repair the damage, call the carrier and have their claim agent inspect the damage before filing your claim with the carrier.



Island Enterprises

MODEL SERIAL NUMBER INFORMATION

The serial numbers of the PA-28-181 Archer III aircraft covered by this Parts Catalog are as follows:

2843001 and up

**SERIAL NUMBER EXPLANATION**

EXAMPLE

28 43 001

TYPE CERTIFICATE DESIGNATION

MODEL SEQUENCE NUMBER

MODEL CODE
43 = PA-28-181 ARCHER III

| | | |
|---|---|---|
| MODEL YEAR | 1995 | 2843001 thru 2843020 |
| MODEL YEAR | 1996 | 2843021 thru 2843066 |
| MODEL YEAR | 1997 | 2843067 thru 2843111 |
| MODEL YEAR | 1998 | 2843112 thru 2843129 |
| | | 2843131 thru 2843202 |
| MODEL YEAR | 1999 | 2843130 |
| | | 2843203 thru 2843308 |
| MODEL YEAR | 2000 | 2843309 thru 2843414 |
| MODEL YEAR | 2001 | 2843415 thru 2843500 |
| MODEL YEAR | 2002 | 2843501 thru 2843541 |
| MODEL YEAR | 2003 | 2843542 thru 2843585 |
| MODEL YEAR | 2004 | 2843586 thru 2843604 |
| MODEL YEAR | 2005 | 2843605 thru 2843619 |
| MODEL YEAR | 2006 | 2843620 thru 2843647 |
| MODEL YEAR | 2007 | 2843648 and Up |

## STANDARD PAINT CHART

| | MFG. NO. | PIPER PART NUMBER QUART | GALLON |
|---|---|---|---|
| **EXTERIOR** | | | |
| POLYURETHANE ENAMEL (Dupont Imron) | | | |
| Baja Yellow | H7850U | 4175 461 | 1175 461 |
| Juneau White | H7848U | 4175 462 | 1175 462 |
| Ocala Orange | H7857UM | 4175 463 | 1175 463 |
| Madrid Red | H7851UM | 4175 464 | 1175 464 |
| Bahama Blue | H7853U | 4175 465 | 1175 465 |
| Avocado | H7852U | 4175 466 | 1175 466 |
| Las Vegas Gold | 5242U | 4176 121 | 1176 121 |
| Dakota Black | 99U | 4175 467 | 1175 467 |
| Denver Brown | H7859U | 4176 122 | 1176 122 |
| Matador Red | H7858U | 4175 468 | 1175 468 |
| Royal Blue | H7856U | 4175 469 | 1175 469 |
| Hickory Brown | H7855U | 4175 470 | 1175 470 |
| Silver | 4531U | 4176 123 | 1176 123 |
| Lime Green | H7854U | 4175 460 | 1175 460 |
| Sage Green | K7887U | 4176 132 | 1175 132 |
| Firethorn | K7888UW | 4176 133 | 1176 133 |
| Buckskin | K7890U | 4176 135 | 1176 135 |
| Dark Blue | K7891U | 4176 136 | 1176 136 |
| Platinum Gray | N7819U | 4176 126 | 1176 126 |
| Sandalwood Tan | N7818U | 4176 127 | 1176 127 |
| Dark Claret | K7886U | 4176 131 | 1176 131 |
| Burnished Gold | N8068U | 4763 528 | 1763 528 |
| Light Blue | K8149U | 4763 529 | 1763 529 |
| Dark Saddle | N8070U | 4763 530 | 1763 530 |
| Dark Green | N8071U | 4763 531 | 1763 531 |
| Saffron | K7889UH | 4763 532 | 1763 532 |
| Light Sandalwood | W8275 | 4763 533 | 1763 533 |
| Light Platinum | W8274 | 4763 534 | 1763 534 |
| Catalyst (Activator) | 912S | 4179 950 | 1179 950 |
| Reducer | Y8485S | 4179 145 | 1179 145 |
| Retarder | 8100S | 4179 599 | 1179 599 |
| Accelerator | 189S | 4179 951 | |
| POLYURETHANE PRIMER (Dupont Imron) | | | |
| Wash Primer | B9287 | 4170 766 | 1179 766 |
| Wash Primer Thinner | K1733 | 4179 452 | 1179 452 |
| Acid Thinner | B9289 | 4179 403 | 1179 403 |
| **INTERIOR** | | | |
| INSTRUMENT PANEL | | | |
| Cadet Dark Grey | | | 170 902 |
| Grey II | | | 170 907 |

NOTE: SEE SERVICE SPARES LETTER 407 FOR AVAILABILITY OF COLOR PAINT FOR THERMOPLASTIC INTERIOR PANELS.

# TABLE OF CONTENTS


| FIGURE NUMBER | FIGURE TITLE | GRID NUMBER |
|---|---|---|
| 1 | Complete Airplane | 1A13 |
| | **SECTION I WING GROUP** | |
| 2 | Wing Installation | 1A16 |
| 3 | Wing Leading Edge Assembly | 1A20 |
| 4 | Wing Trailing Edge Assembly | 1A24 |
| 5 | Aileron Assembly | 1B4 |
| 6 | Flap Assembly | 1B6 |
| | **SECTION II FUSELAGE GROUP** | |
| 7 | Fuselage Assembly - Complete | 1B14 |
| 8 | Fuselage Upper Forward Cockpit Assembly | 1B18 |
| 9 | Fuselage Upper Center Cockpit Assembly | 1B22 |
| 10 | Fuselage Lower Forward Cockpit Assembly | 1C2 |
| 11 | Fuselage Lower Aft Cockpit Assembly | 1C6 |
| 12 | Fuselage Aft Section | 1C8 |
| 13 | Fuselage Cabin and Baggage Door Installation | 1C12 |
| 14 | Fuselage Enclosure Installation | 1C16 |
| | **SECTION III TAIL SURFACES GROUP** | |
| 15 | Tail Surfaces Installation | 1C20 |
| 16 | Stabilator Assembly | 1C24 |
| 17 | Fin Assembly | 1D2 |
| 18 | Rudder Assembly | 1D4 |
| | **SECTION IV LANDING GEAR GROUP** | |
| 19 | Nose Gear Installation | 1D10 |
| 20 | Nose Gear Strut Assembly | 1D14 |
| 21 | Nose Wheel Assembly (Cleveland) | 1D18 |
| 22 | Nose Wheel Assembly (McCauley) | 1D20 |
| 23 | Main Gear Installation | 1D22 |
| 24 | Main Wheel Assembly | 1E2 |
| 25 | Brake Assembly | 1E4 |
| 26 | Main and Nose Wheel Faring Installation | 1E6 |
| 27 | Main Landing Gear Strut Fairing Installation | 1E10 |
| 28 | Hand Brake Installation | 1E12 |
| 29 | Toe Brake Installation | 1E16 |
| 30 | Toe Brake Master Cylinder Assembly | 1E18 |

# TABLE OF CONTENTS


| FIGURE NUMBER | FIGURE TITLE | GRID NUMBER |
|---|---|---|
| | **SECTION V CABIN EQUIPMENT GROUP** | |
| 31 | Interior Installation | 1F2 |
| 32 | Front Seats Installation | 1F8 |
| 33 | Carpet Installation | 1F12 |
| 34 | Vertically Adjustable Front Seat Assembly | 1F14 |
| 35 | Rear Seats Installation | 1F18 |
| | **SECTION VI INSTRUMENTS GROUP** | |
| 36 | Instrument Panel Installation | 1G2 |
| 37 | Vacuum System Installation | 1G6 |
| 38 | Auxiliary Vacuum System Installation | 1G8 |
| 39 | Pitot Static System Installation | 1G10 |
| | **SECTION VII POWER PLANT GROUP** | |
| 40 | Power Plant Installation | 1G16 |
| 41 | Engine Exhaust System Installation | 1G20 |
| 42 | Engine Baffle Installation | 1G22 |
| 43 | Engine Cowl Installation | 1H2 |
| 44 | Engine Controls Installation | 1H6 |
| | **SECTION VIII FUEL SYSTEM GROUP** | |
| 45 | Forward Fuel System Installation | 1H14 |
| 46 | Aft Fuel System Installation | 1H18 |
| 47 | Fuel Tank Assembly | 1H20 |
| | **SECTION IX CONTROL SYSTEM GROUP** | |
| 48 | Control System Installation | 1I2 |
| 49 | Flap Control Installation | 1I6 |
| 50 | Stabillator Trim Installation | 1I10 |
| 51 | Rudder Trim Mechanism Installation | 1I14 |
| 52 | Control Wheel Installation | 1I16 |
| 53 | Rudder Pedal Installation | 1I20 |

# TABLE OF CONTENTS


| FIGURE NUMBER | FIGURE TITLE | GRID NUMBER |
|---|---|---|
| | **SECTION X ENVIRONMENTAL GROUP** | |
| 54 | Cabin Heat and Defroster Installation | 2A16 |
| 55 | Fresh Air Ventilation Installation | 2A20 |
| 56 | Air Conditioning Compressor, Refrigerant Lines, and Alternator Installation | 2A22 |
| 57 | Air Conditioning Duct and Evaporator Installation | 2B2 |
| 58 | Air Conditioning Condenser Installation | 2B4 |
| | **SECTION XI ELECTRICAL SYSTEM GROUP** | |
| 59 | Fwd Electrical System Installation | 2B12 |
| 60 | Instrument Panel Electrical Installation - Non Entegra | 2B18 |
| 60A | Entegra Instrument Panel Electrical Installation | 2B22 |
| 61 | Overhead Switch Panel | 2C2 |
| 62 | Wing & Aft Electrical System Installation and Lighting | 2C4 |
| 63 | Battery Installation | 2C10 |
| 64 | Auxiliary Power Receptacle Installation | 2C12 |
| 65 | Air Conditioning Electrical Installation | 2C14 |
| | **SECTION XII ELECTRONICS GROUP** | |
| 66 | Magnetometer & Misc. Entegra Avionics Equipment | 2D2 |
| 67 | Deleted | |
| 68 | Emergency Locator Transmitter (ELT 110-4) Installation | 2D6 |
| 69 | Encoder Installation | 2D8 |
| 70 | Radio, Antenna System and Static Wicks Installation | 2D10 |
| 71 | Avionics Cooling Installation | 2D14 |
| | Avionics Equipment Lists | 2D17 |
| | **SECTION XIII MISCELLANEOUS GROUP** | |
| 72 | Placards and Exterior Stencils | 2E1 |
| | Piper Service and Optional Kits | 2E9 |
| | Miscellaneous Hardware and Consumables | 2E11 |
| | **NUMERICAL INDEX** | 2F1 |

THIS PAGE INTENTIONALLY LEFT BLANK

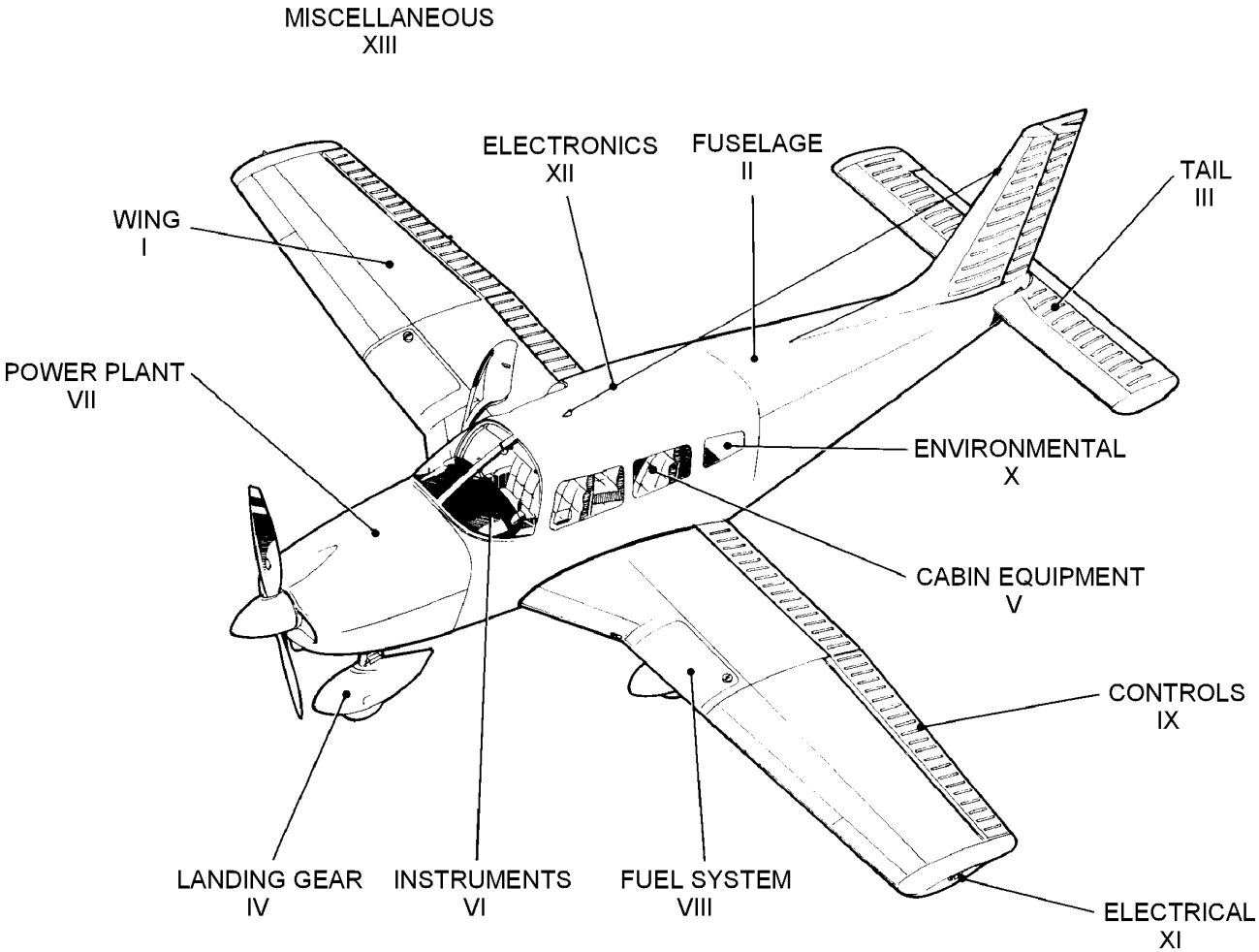


**Complete Airplane Drawings**

| | |
|---|---|
| **85191-002** | **2843001 thru 2843202** |
| **85191-003** | **2843203 thru 2843414** |
| **85191-004** | **2843415 and up** |
| **85191-005** | **2843598 and up (with Entegra)** |

Figure 1. Complete Airplane

## SERVICE BULLETINS INCORPORATED

| | | | |
|---|---|---|---|
| 990 | 1037 | 1083 | 1162 |
| 992 | 1040 | 1104 | 1167 |
| 996 | 1041 | 1122 | |
| 1019 | 1050 | 1137 | |
| 1020 | 1057 | 1139 | |
| 1022 | 1066 | 1141 | |
| 1026 | 1079 | 1153 | |

## SERVICE LETTERS INCORPORATED

| | |
|---|---|
| 1019 | 1093 |
| 1024 | |
| 1028 | |
| 1033 | |
| 1066 | |
| 1081 | |
| 1087 | |

# SECTION X
# ENVIRONMENTAL GROUP

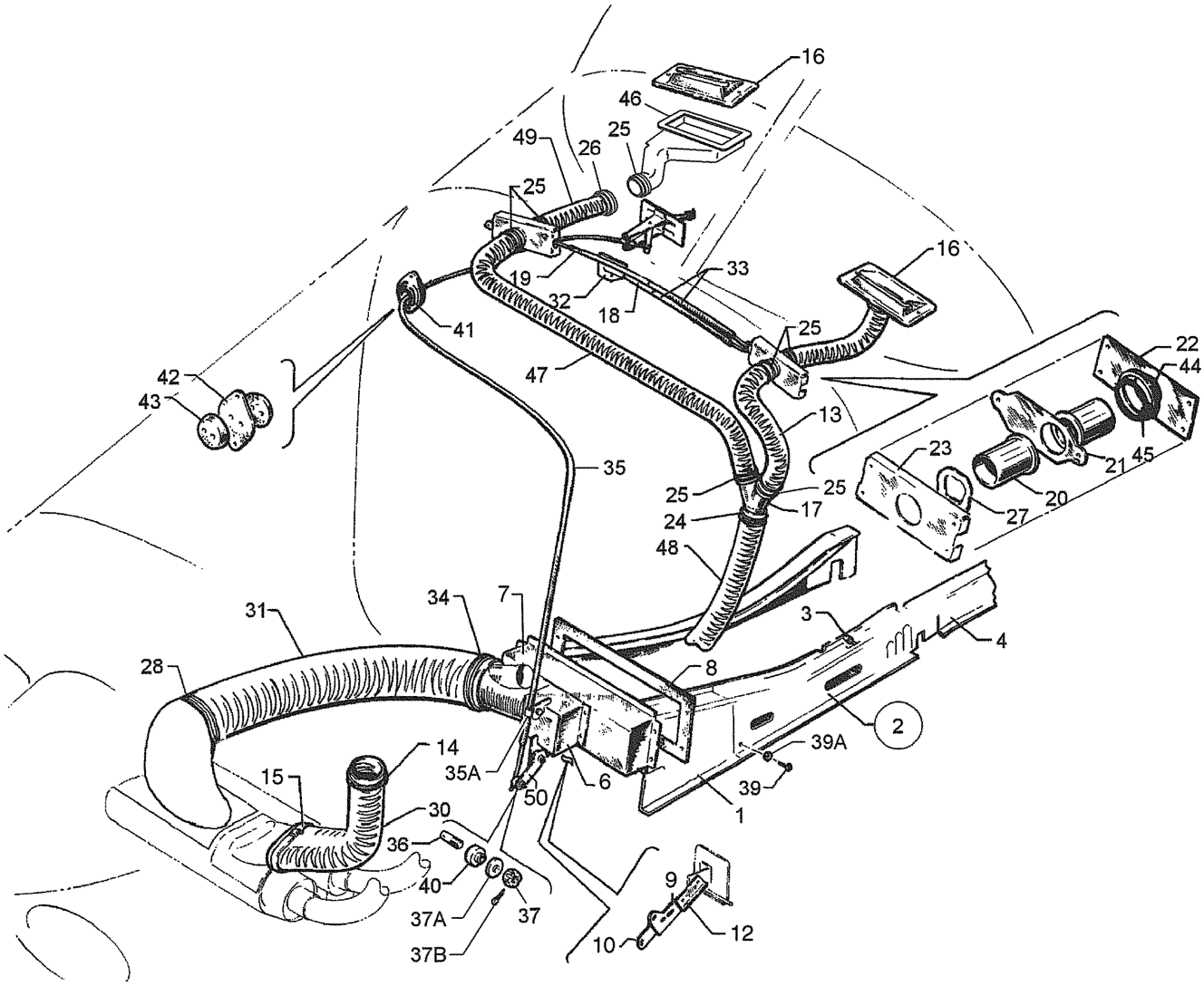


Figure 54. Cabin Heat and Defroster Installation

| Figure and Index Number | Part Number | Nomenclature | No. Req. | Serial Numbers Affected |
|---|---|---|---|---|
| 54- | 99023 (H) | DRAWING - Cabin Heat Installation | | |
| | 99024 (L) | DRAWING - Defroster System Installation | | |
| | 85472 (AM) | DRAWING - Power Plant Installation | | |
| | 89402 C | DRAWING - Fresh Air Cable Installation | | |
| | 76220 (D) | DRAWING - Duct Installation | | |
| 1 | 76219-000 | DUCT ASSY - Cabin heat, front, left | 1 | |
| -1A | 76219-001 | DUCT ASSY - Cabin heat, front, right | 1 | |
| 2 | 36511-002 | DUCT ASSY - Cabin heat, center, left (When ordering, specify color) | 1 | |
| -2A | 36511-003 | DUCT ASSY - Cabin heat, center, right (When ordering, specify color) | 1 | |
| 3 | 66980-000 | . KNOB - Heat duct | 1 | |
| -3A | 99411-000 | . LEVER | 1 | |
| -3B | 99412-000 | . BRACKET | 1 | |
| -3C | 99412-001 | . BRACKET | 1 | |
| 4 | 76129-006 | DUCT - Cabin heat, rear, left | 1 | |
| -4A | 76129-007 | DUCT - Cabin heat, rear, right | 1 | |
| -5 | 65646-000 | BOX ASSY - Cabin heat | 1 | |
| 6 | 65545-000 | . BOX ASSY - Cabin heat | 1 | |
| 7 | 62962-000 | . BOX ASSY - Distributor, cabin heat | 1 | |
| 8 | 62969-000 | GASKET - Distributor box | 1 | |
| 9 | 36558-002 | LINK - Cabin heat box | 1 | |
| 10 | 36558-004 | LINK - Cabin heat box | 1 | |
| 13 | 63633-015 | HOSE - Defroster | 1 | |
| 14 | 554-752 | CLAMP - Hose | 2 | |
| 15 | 554-772 | CLAMP | 1 | |
| 16 | 65318-000 | OUTLET - Defroster air (Non Entegra) | 2 | |
| -16A | 415-497 | SCREW - (MS35206-232) (Non Entegra) | 4 | |
| -16B | 690-639 | WASHER - (NAS1149FN616P) (Non Entegra) | 4 | |
| -16C | 404-528 | NUT - (MS21042-06) (Non Entegra) | 4 | |
| 17 | 69229-000 | TAKEOFF ASSY - Defroster air | 1 | |
| 18 | 554-143 | CABLE ASSY - Defroster control | 1 | |
| 19 | 554-144 | CABLE ASSY - Defroster valve | 1 | |
| -19A | 454-887 | CLAMP | 3 | |
| -19B | 411-533 | SCREW - (MS35207-264) | 3 | |
| -19C | 690-612 | WASHER - (NAS1149F0363P) | 6 | |
| -19D | 404-526 | NUT - (MS21042-3) | 3 | |
| 20 | 69279-000 | TUBE - Defroster valve | 4 | |
| 21 | 67705-000 | GATE - Defroster valve | 2 | |
| 22 | 69274-000 | PLATE - Defroster valve | 2 | |
| -23 | 69273-000 | HOUSING - Defroster valve | 2 | |
| -24 | 554-941 | CLAMP - Hose | 1 | |
| -24A | 411-532 | SCREW - (MS35207-263) | 1 | |
| -25 | 454-985 | CLAMP - Hose | 6 | |
| -26 | 454-985 | CLAMP - Hose | 2 | |
| 27 | 494-123 | WASHER - Spring | 4 | |
| 28 | 554-772 | CLAMP - Hose | 2 | |
| 30 | 63633-207 | HOSE - Air inlet | 1 | |
| 31 | 63633-208 | HOSE - Cabin heat | 1 | |
| 32 | 69275-000 | CLAMP - Defroster cable | 1 | |
| -32A | 415-513 | SCREW - (MS35206-226) | 3 | |
| -32B | 690-640 | WASHER - (NAS1149FN632P) | 3 | |
| -32C | 404-528 | NUT - (MS21042-06) | 3 | |
| 33 | 63882-031 | SLEEVE - Defroster cable | 2 | |

-ITEM NOT ILLUSTRATED

| Figure and Index Number | Part Number | Nomenclature | No. Req. | Serial Numbers Affected |
|---|---|---|---|---|
| 54- | | | | |
| 34 | 554-772 | CLAMP - Hose | 2 | |
| 35 | 554-142 | CABLE ASSY - Cabin heat control, complete | 1 | |
| 35A | 454-887 | CLAMP | 1 | |
| -35B | 411-532 | SCREW - (MS35207-263) | 1 | |
| -35C | 404-526 | NUT - (MS21042-3) | 1 | |
| 36 | 70371-003 | STUD - Swivel fitting | 1 | |
| 37 | 404-962 | NUT - (AN320-3) | 1 | |
| 37A | 690-612 | WASHER - (NAS1149F0363P) | 1 | |
| 37B | 424-051 | PIN - Cotter (MS24665-132) | 1 | |
| -38 | 62962-000 | BOX ASSY - Distributor, cabin heat | 1 | |
| 39 | 419-681 | SCREW - Heat duct | 38 | |
| 39A | 494-001 | WASHER - Heat duct | 38 | |
| 40 | 70371-002 | FITTING - Swivel | 2 | |
| 41 | 66789-000 | PLATE - Firewall seal | 2 | |
| 42 | 22105-003 | GASKET - Firewall seal | 1 | |
| -42A | 415-535 | SCREW - (MS35206-245) | 2 | |
| -42B | 404-529 | NUT - (MS21042-08) | 2 | |
| 43 | 68770-014 | GROMMET - Firewall seal | 2 | |
| 44 | 62833-104 | WASHER | 2 | |
| 45 | 484-841 | O-RING | 2 | |
| 46 | 79615-002 | DUCT ASSY - Defroster, left (Non Entegra) | 1 | |
| -46A | 79615-003 | DUCT ASSY - Defroster, right (Non Entegra) | 1 | |
| 47 | 63633-060 | HOSE - Defroster | 1 | |
| 48 | 63633-055 | HOSE - Defroster | 1 | |
| 49 | 63633-015 | HOSE - Air duct (Entegra) | 1 | 2843598 and up |
| -49A | 69278-003 | OUTLET ASSY - Defroster air (Entegra) | 2 | 2843598 and up |
| 50 | 99015-000 | LINK | 1 | |
| -50A | 415-519 | SCREW - (MS35206-229) | 1 | |
| -50B | 404-528 | NUT - (MS21042-06) | 1 | |
| -50C | 690-640 | WASHER - (NAS1149FN632P) | 2 | |

-ITEM NOT ILLUSTRATED

When ordering, always specify Part Number, Description, and Serial Number of Aircraft

THIS PAGE INTENTIONALLY LEFT BLANK

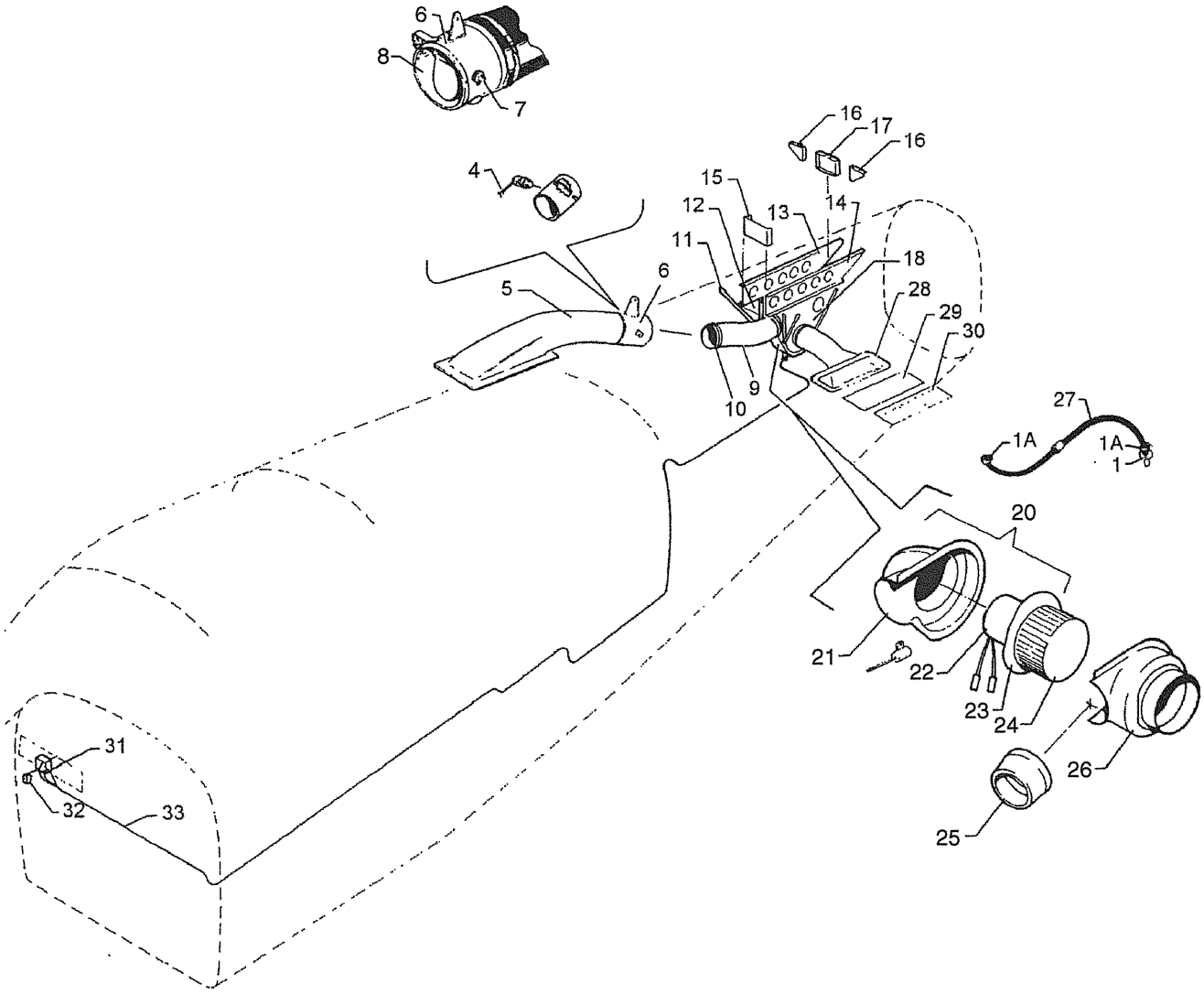


Figure 55. Fresh Air Ventilation Installation

| Figure and Index Number | Part Number | Nomenclature | No. Req. | Serial Numbers Affected |
|---|---|---|---|---|
| 55- | 36983 (AU) | DRAWING - Ram Air and Blower Ventilation Installation | | |
| | 89402 C | DRAWING - Fresh Air Cable Installation | | |
| 1 | 79290-000 | TUBE - Drain | 1 | |
| 1A | 554-575 | CLAMP | 2 | 2843001 thru 2843500 |
| 1A | 554-640 | CLAMP | 2 | 2843501 and up |
| 4 | 653-641 | CABLE ASSY - Fresh air | 1 | |
| 5 | 69992-002 | DUCT AND FLAPPER VALVE ASSY - Aft | 1 | |
| 6 | 69885-012 | . FLAPPER VALVE ASSY - Fresh air intake | 1 | |
| 7 | 69885-002 | . . SHAFT ASSY | 1 | |
| 8 | 69885-003 | . . FLAPPER ASSY | 1 | |
| 9 | 63633-148 | HOSE - Fresh air blower | 1 | |
| 10 | 554-640 | CLAMP | 4 | |
| 11 | 79303-000 | BRACE - Hanger | 2 | |
| 12 | 79282-000 | HANGER ASSY - Blower, right | 1 | |
| 13 | 79287-000 | INTERCOSTAL - Blower bracket support, right | 1 | |
| 14 | 79280-000 | INTERCOSTAL - Blower bracket support, left | 1 | |
| 15 | 79285-000 | BRACKET - Intercostal, forward | 1 | |
| 16 | 79035-000 | GUSSET ASSY - Intercostal | 2 | |
| 17 | 79286-000 | BRACKET - Intercostal, aft | 1 | |
| 18 | 79281-000 | HANGER ASSY - Blower, left | 1 | |
| -19 | 79266-000 | BLOWER ASSY - Fresh Air (optional) | 1 | |
| 20 | 99642-004 | . BLOWER ASSY - Fresh air | 1 | |
| 21 | 37997-002 | . . COVER - Fresh air blower | 1 | |
| -21A | 434-128 | . . GROMMET - (MS35489-6) | 1 | |
| 22 | 761-778 | . . MOTOR ASSY - Fresh air blower | 1 | |
| 23 | 99641-000 | . . PLATE ASSY - Motor mounting | 1 | |
| -23A | 690-616 | . . WASHER - (NAS1149FN832P) | 2 | |
| -23B | 404-521 | . . NUT - (MS21042-08) | 2 | |
| -24 | 452-935 | . . BLOWER | 1 | |
| -25 | 99633-000 | . DUCT - Hose connect | 1 | |
| -26 | 79264-000 | . COVER ASSY - Fresh air blower | 1 | |
| 27 | 63904-112 | HOSE | 1 | |
| 28 | 36615-005 | DUCT ASSY - Air vent (with filter) | 1 | |
| 29 | 36616-003 | . FILTER - Air vent | 1 | |
| 30 | 36612-002 | LOUVER - Air vent | 1 | |
| 31 | 688-298 | SWITCH - Blower | 1 | 2843001 thru 2843202 |
| -31A | 472-200 | LAMP | 2 | 2843001 thru 2843202 |
| -31B | 561-022 | FILTER | 2 | 2843001 thru 2843202 |
| -31C | 84622-093 | CAP - Switch (hi vent/fan lo) | 1 | 2843001 thru 2843202 |
| 32 | 454-743 | CIRCUIT BREAKER - 20 amp. | 1 | 2843001 thru 2843202 |
| 33 | 79293-005 | HARNESS ASSY - Blower | 1 | 2843001 thru 2843202 |

-ITEM NOT ILLUSTRATED

When ordering, always specify Part Number, Description, and Serial Number of Aircraft

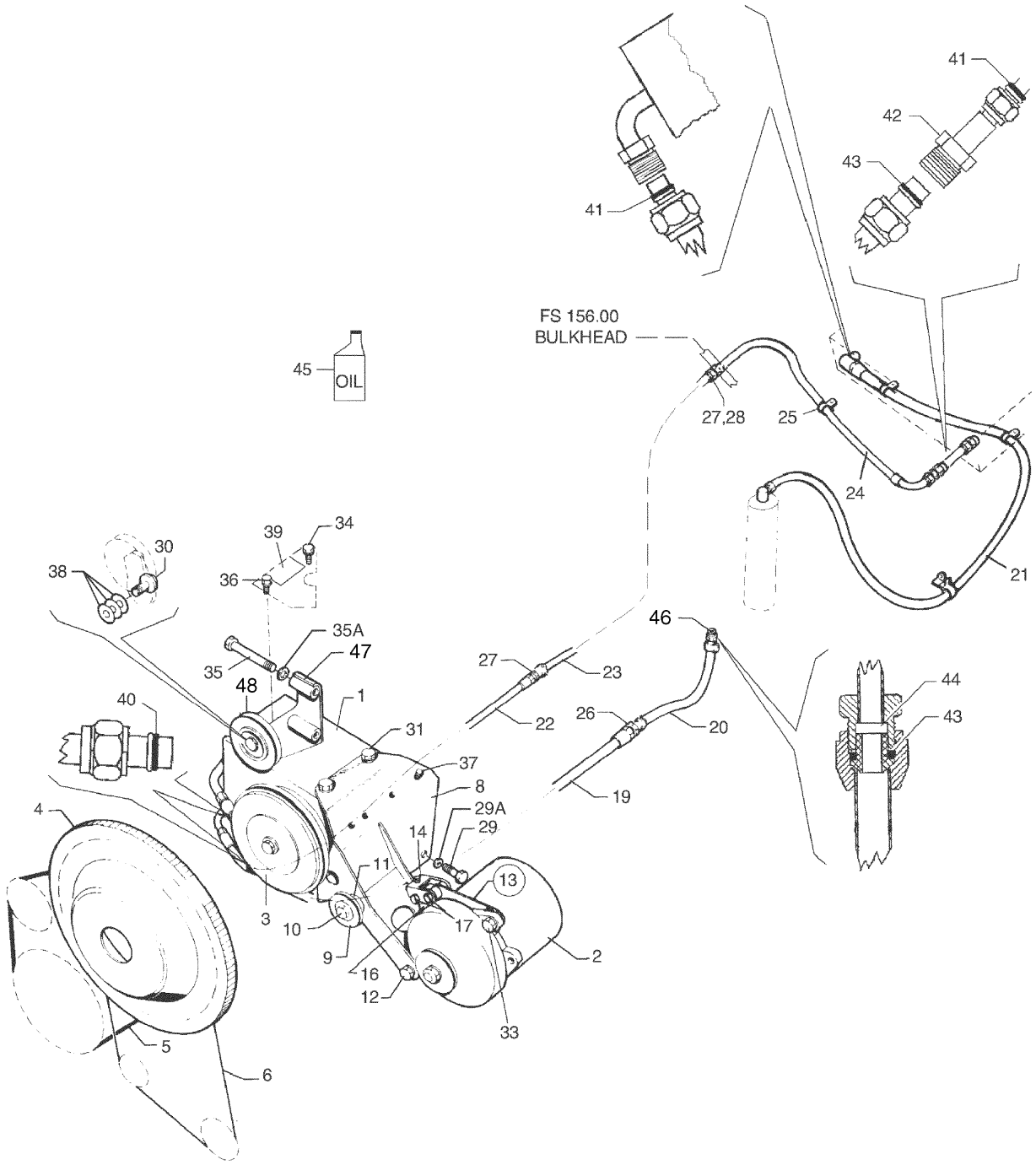


Figure 56. Air Conditioning Compressor, Refrigerant Lines and Alternator Installation

| Figure and Index Number | Part Number | Nomenclature | No. Req. | Serial Numbers Affected |
|---|---|---|---|---|
| 56 | 99109 (BL) | DRAWING - Airconditioning Compressor and Alternator Installation | | |
| | 99576 (AL) | DRAWING - Airconditioning Refrigerant Lines Installation (Optional) | | |
| 1 | 101173-007 | COMPRESSOR ASSY | 1 | |
| -1A | 651-547 | . FITTING - 5/8 tubo (022-21749) (SEE NOTE 1) | 1 | |
| -1B | 651-547 | . FITTING - Flange 1/2 tubo (022-21748) (SEE NOTE 1) | 1 | |
| -1C | 485-303 | . “O”-ring - (028-21866) | A/R | |
| -1D | 765-217 | . VALVE CORE - (2959) (For R-134 Filler Port) | 1 | |
| 2 | 02591-002 | ALTERNATOR ASSY (SEE NOTE 2) | RF | |
| 3 | 687-703 | CLUTCH ASSY | 1 | |
| 4 | 487-725 | RING GEAR ASSY (Supplied with engine) | 1 | |
| 5 | 73965-005 | BELT | 1 | |
| 5 | 73965-010 | BELT - (Optional) | 1 | |
| 6 | 73965-020 | BELT - (Optional) | 1 | |
| 6 | 73965-019 | BELT | 1 | |
| 8 | 79584-009 | BRACKET ASSY - Compressor, lower | 1 | |
| 9 | 85532-003 | . PULLEY ASSY - Alternator drive | 1 | |
| 10 | 553-230 | . BOLT - (NAS2906-20) | 1 | |
| -10A | 62833-082 | . WASHER - Alternator pulley | 2 | |
| -10B | 79558-002 | . NUT - Alternator pulley | 1 | |
| 11 | 95061-151 | . BUSHING - Alternator idler pulley | 1 | |
| -11A | 99892-000 | . PLACARD | 1 | |
| 12 | 401-394 | BOLT - (AN6-13A) | 2 | |
| -12A | 690-629 | WASHER - (NAS1149F0663P) | 4 | |
| -12B | 404-532 | NUT - (MS21042-6) | 2 | |
| 13 | 79886-011 | BRACKET ASSY COMPLETE - Alternator support (SEE NOTE 3) | 1 | |
| 13 | 79886-012 | ARM ASSY (Refer to Piper Service Letter #1019 - latest revision) | 1 | |
| -13A | 101103-002 | BRACE (Refer to Piper Service Letter #1019 - latest revision) | 1 | |
| -13B | 99109-015 | CAP SCREW (Refer to Piper Service Letter #1019 - latest revision) | 1 | |
| -13C | 418-421 | CAP SCREW (Refer to Piper Service Letter #1019 - latest revision) | 1 | |
| 14 | 79886-003 | CHANNEL ASSY - Alternator support | 1 | |
| 16 | 79886-007 | ARM ASSY - Alternator support | 1 | |
| 17 | 401-315 | BOLT - (AN4-15A) | 2 | |
| -17A | 690-613 | WASHER - (NAS1149F0432P) | 2 | |
| -17B | 404-530 | NUT - (MS21042-4) | 2 | |
| 19 | 84266-008 | HOSE ASSY - Suction | 1 | |
| 20 | 63904-072 | HOSE - Suction | 1 | |
| 21 | 84266-005 | HOSE ASSY - Receiver dehydrator to condenser | 1 | |
| 22 | 84266-007 | HOSE ASSY - Discharge | 1 | |
| 23 | 63904-080 | HOSE - Discharge | 1 | |
| 24 | 84266-019 | HOSE ASSY - Discharge (566-419) (Refer to Piper Service Letter #1033 - latest revision) | 1 | |
| -24A | 454-868 | CLAMP (Reference Piper Service Letter #1033-Latest Revision) | 1 | 2843202 thru 2843414 |
| 25 | 454-935 | CLAMP | 1 | |
| -25A | 63900-127 | SPACER | 1 | |

-ITEM NOT ILLUSTRATED

When ordering, always specify Part Number, Description, and Serial Number of Aircraft

| Figure and Index Number | Part Number | Nomenclature | No. Req. | Serial Numbers Affected |
|---|---|---|---|---|
| 56- | | | | |
| -25B | 411-534 | SCREW - (MS35207-265) | 1 | |
| -25C | 404-526 | NUT - (MS21042-3) | 1 | |
| -25D | 454-932 | CLAMP | 1 | |
| 26 | 561-012 | FITTING | 1 | |
| -26A | 584-257 | REDUCER | 1 | |
| 27 | 561-013 | FITTING | 2 | |
| -27A | 584-256 | REDUCER | 2 | |
| 28 | 189-625 | GROMMET | AR | |
| 29 | 401-988 | BOLT - (MS20074-06-11) | 2 | |
| 29A | 690-620 | WASHER - (NAS1149F0632P) | 2 | |
| -29B | 407-046 | WASHER - (MS35338-46) | 2 | |
| 30 | 400-616 | BOLT - (AN8H-7A) | 1 | |
| -30A | 690-631 | WASHER - (NAS1149F0863P) | 1 | |
| 31 | 401-987 | BOLT - (MS20074-06-06) | 2 | |
| -31A | 690-629 | WASHER - (NAS1149F0663P) | 2 | |
| -31B | 407-046 | WASHER - (MS35338-46) | 2 | |
| 33 | 401-971 | BOLT - (MS20074-05-06) | 1 | |
| -33A | 690-628 | WASHER - (NAS1149F0563P) | 1 | |
| 34 | 401-987 | BOLT - (MS20074-06-06) | 1 | |
| -34A | 690-620 | WASHER - (NAS1149F0632P) | 1 | |
| -34B | 407-046 | WASHER - (MS35338-46) | 1 | |
| 35 | 401-461 | BOLT - (AN6H-22A) | 2 | |
| 35A | 690-629 | WASHER - (NAS1149F0663P) | 4 | |
| -35B | 690-620 | WASHER - (NAS1149F0632P) | 2 | |
| -35C | 407-046 | WASHER - (MS35338-46) | 2 | |
| 36 | 401-992 | BOLT - (MS20074-06-07) | 1 | |
| -36A | 690-620 | WASHER - (NAS1149F0632P) | 1 | |
| -36B | 407-046 | WASHER - (MS35338-46) | 1 | |
| 37 | 401-970 | BOLT - (MS20074-05-05) | 4 | |
| -37A | 690-619 | WASHER - (NAS1149F0532P) | 4 | |
| 38 | 62833-083 | WASHER | 3 | |
| 39 | 69669-204 | PLACARD | 1 | |
| | | (Attention: This air conditioning system serviced...) | | |
| 40 | 485-198 | O-ring - Suction line | 1 | |
| -40A | 485-196 | O-ring - Discharge line | 1 | |
| 41 | 485-197 | O-ring | 2 | |
| 42 | 603-500 | UNION | 1 | |
| 43 | 485-196 | O-ring | 2 | |
| 44 | 600-701 | ADAPTER | 1 | |
| 45 | 197-511 | REFRIGERATION OIL - 14 ounce bottle | 1 | |
| | | (Approved for usage in R134a systems) | | |
| 46 | 584-258 | REDUCER | 1 | |
| 47 | 99630-000 | BRACKET ASSY - Compressor, upper | 1 | |
| 48 | 99080-000 | . IDLER PULLER ASSY - Compressor drive | 1 | |

-ITEM NOT ILLUSTRATED

When ordering, always specify Part Number, Description, and Serial Number of Aircraft

| Figure and Index Number | Part Number | Nomenclature | No. Req. | Serial Numbers Affected |
|---|---|---|---|---|
| 56- | | | | |

NOTES:

1. IF “O”-RING IS DAMAGED REMOVE FROM SHIPPING PLATE AND REPLACE WITH 028-21866 PIPER PART NUMBER NUMBER 458-303. SEE ITEM -1C.

2. SUPPLIED WITH ENGINE. SECURE PART NUMBER 32C21997 FROM TEXTRON LYCOMING CORPORATION, WILLIAMSPORT, PA.

3. REFERENCE PIPER SERVICE LETTER #1019 - LATEST REVISION. FOR SERVICE ONLY.

-ITEM NOT ILLUSTRATED

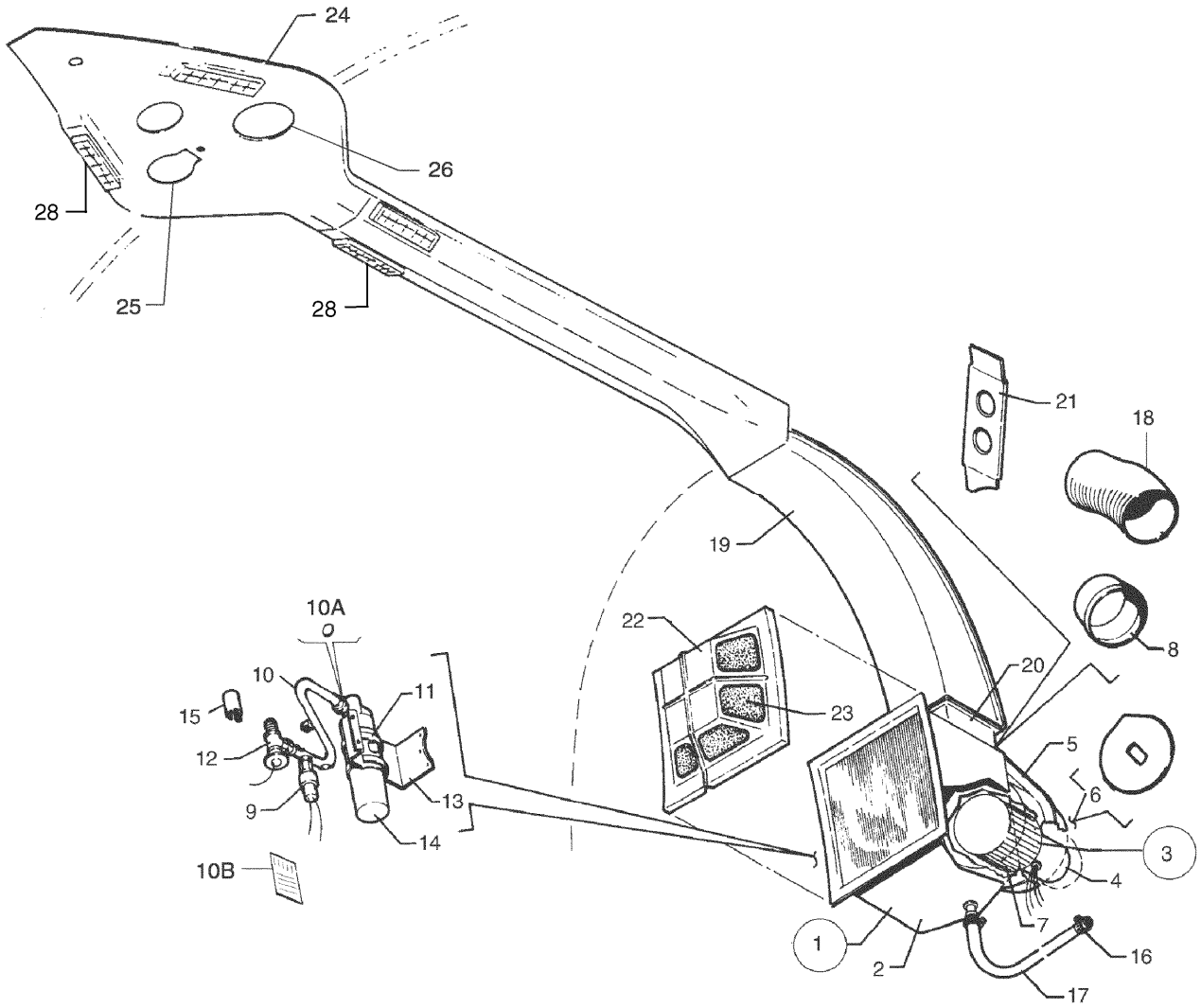


Figure 57. Air Conditioning Duct and Evaporator Installation

| Figure and Index Number | Part Number | Nomenclature | No. Req. | Serial Numbers Affected |
|---|---|---|---|---|
| 57- | 76493 (L) | DRAWING - Airconditioning Duct Installation (Optional) | | |
| | 79849 (AH) | DRAWING - Evaporator Bulkhead Assy (Optional) | | |
| | 78734 (V) | DRAWING - Bulkhead Installation | | |
| | 79841 (L) | DRAWING - Evaporator Assy (Airconditioning) | | |
| 1 | 99640-008 | EVAPORATOR ASSY - Air conditioning (complete) | 1 | |
| 2 | 99640-009 | . EVAPORATOR AND HOUSING ASSY - Air conditioning | 1 | |
| 3 | 99642-004 | . BLOWER ASSY - Evaporator | 1 | |
| 4 | 761-778 | . . MOTOR ASSY - Evaporator blower | 1 | |
| -4A | 434-128 | . . GROMMET - (MS35489-6) | 1 | |
| 5 | 37997-002 | . . COVER - Evaporator blower | 1 | |
| 6 | 99641-000 | . . PLATE ASSY - Motor mounting | 1 | |
| 7 | 452-935 | . . BLOWER | 1 | |
| 8 | 99633-000 | . DUCT - Hose connect | 1 | |
| 9 | 688-425 | . SWITCH ASSY - Pressure | 1 | |
| 10 | 689-106 | . LINE ASSY - Evaporator inlet | 1 | |
| 10A | 485-197 | . O-ring - One in each end of tube | 2 | |
| 10B | 69669-204 | . PLACARD | 1 | |
| | | (Attention: This air conditioning system serviced...) | | |
| 11 | 654-001 | . CLAMP | 2 | |
| 12 | 592-633 | . VALVE ASSY - Evaporator expansion | 1 | |
| -12A | 485-196 | . O-RING | 1 | |
| 13 | 99650-000 | . BRACKET - Receiver dehydrator | 1 | |
| 14 | 602-275 | . RECEIVER DEHYDRATOR | 1 | |
| 15 | 99661-000 | . CLAMP - Bulb, expansion valve | 1 | |
| 16 | 554-861 | CLAMP | 2 | |
| 17 | 63913-199 | HOSE - Evaporator drain | 1 | |
| 18 | 63633-100 | HOSE - Air conditioning | 1 | |
| 19 | 79839-003 | DUCT ASSY - Aft cabin bulkhead | 1 | |
| -19A | 66787-000 | PLACARD | 1 | |
| 20 | 79840-004 | DUCT ASSY - Interconnect | 1 | |
| 21 | 99539-000 | SUPPORT ASSY - Evaporator box | 1 | |
| 22 | 99550-002 | COVER - Evaporator filter | 1 | |
| -22A | 419-713 | SCREW | 4 | |
| -22B | 494-004 | WASHER | 4 | |
| 23 | 99644-000 | FILTER - Evaporator | 1 | |
| 24 | 78736-002 | PANEL ASSY - Overhead (speaker and lights) | 1 | |
| -24A | 78736-003 | PANEL ASSY - Overhead (lights) | 1 | |
| 25 | 87499-003 | . LIGHT ASSY | 1 | |
| 26 | 99746-003 | . SPEAKER ASSY | 1 | |
| -27 | 69669-020 | . PLACARD | 1 | |
| 28 | 473-700 | . LOUVER ASSY | 2 | |

-ITEM NOT ILLUSTRATED

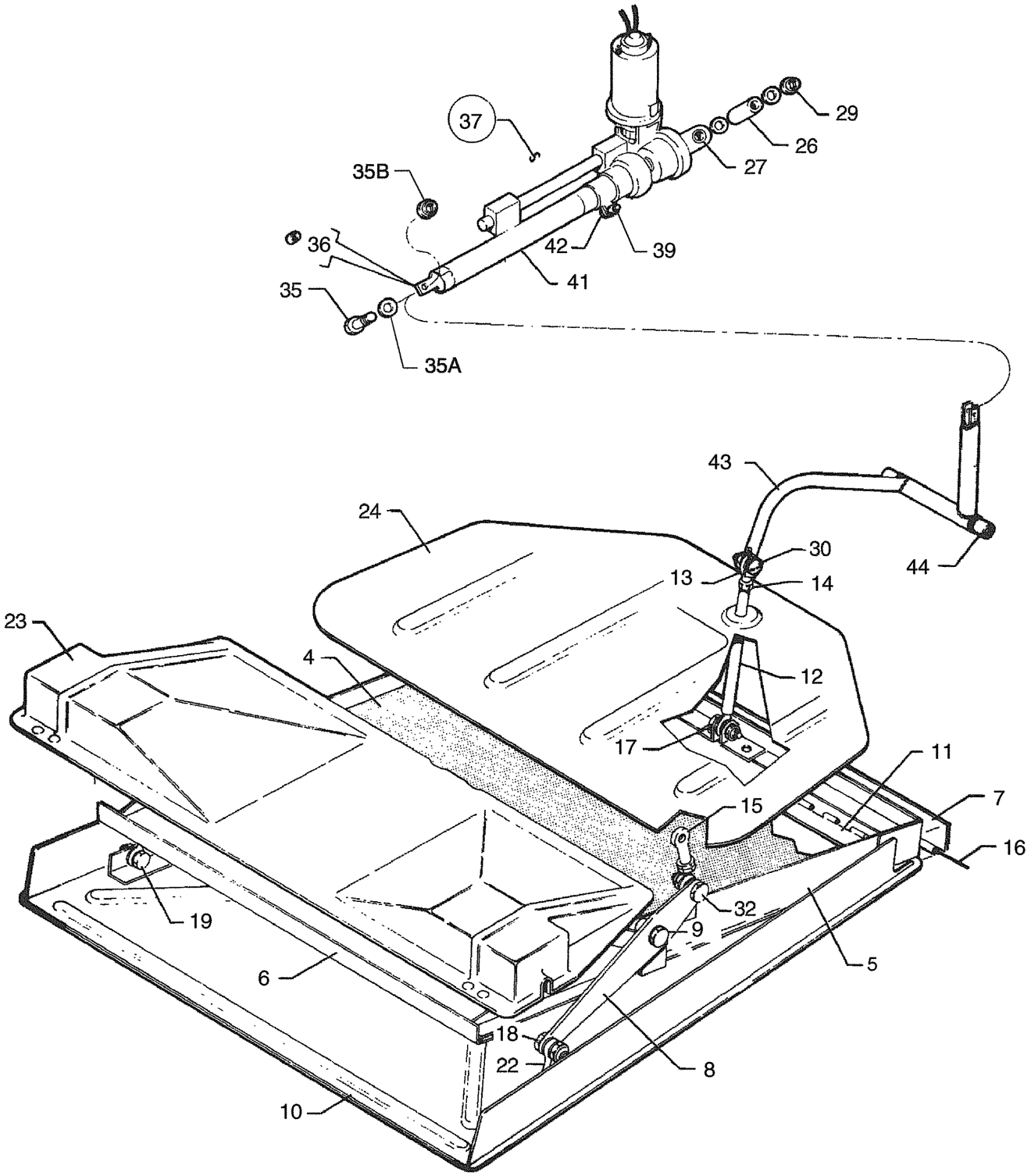


Figure 58. Air Conditioning Condenser Installation

| Figure and Index Number | Part Number | Nomenclature | No. Req. | Serial Numbers Affected |
|---|---|---|---|---|
| 58- | 99855 (AE) | DRAWING - Airconditioning Condenser Installation | | |
| | 99575 (AB) | DRAWING - Airconditioning Installation | | |
| -1 | 99855-003 | CONDENSER ASSY | 1 | |
| -2 | 99387-005 | . CONDENSER ASSY - Air conditioning (complete) | 1 | |
| -3 | 84267-002 | . . CONDENSER ASSY - Nutplate Installation | 1 | |
| 4 | 552-250 | . . . CONDENSER | 1 | |
| 5 | 99387-006 | . . FRAME ASSY | 1 | |
| 6 | 99263-000 | . . HINGE ASSY - Condenser door | 1 | |
| 7 | 99275-002 | . . HINGE - Half | 1 | |
| -7A | 69669-120 | . . PLACARD | 1 | |
| 8 | 99495-000 | . . BELLCRANK ASSY - Condenser door mechanism | 2 | |
| 9 | 403-401 | . . BOLT - (NAS6203-13) | 2 | |
| -9A | 690-609 | . . WASHER - (NAS1149F0332P) | 2 | |
| 10 | 99271-000 | . DOOR ASSY - Louver | 1 | |
| 11 | 99275-002 | . . HINGE - Half | 1 | |
| 12 | 99557-004 | . ROD ASSY - Condenser push | 1 | |
| 13 | 452-558 | . . BEARING - Rod end | 2 | |
| 14 | 404-224 | . . NUT - (AN315-3R) | 1 | |
| 15 | 99561-000 | . BEARING ASSY - Condenser door actuating | 2 | |
| 16 | 99275-004 | . PIN - Hinge | 1 | |
| 17 | 401-269 | . BOLT - (AN3-10A) | 1 | |
| -17A | 690-612 | . WASHER - (NAS1149FN363P) | 5 | |
| -17B | 404-526 | . NUT - (MS21042-3) | 1 | |
| 18 | 400-861 | . BOLT - (AN23-13A) | 2 | |
| -18A | 690-612 | . WASHER - (NAS1149FN363P) | 2 | |
| -18B | 62833-101 | . WASHER - (.56 O. D.) | 2 | |
| -18C | 404-526 | . NUT - (MS21042-3) | 2 | |
| 19 | 400-861 | . BOLT - (AN23-13A) | 2 | |
| -19A | 690-612 | . WASHER - (NAS1149FN363P) | 4 | |
| -19B | 62833-101 | . WASHER - (.56 O.D.) | 2 | |
| -19C | 404-526 | . NUT - (MS21042-3) | 2 | |
| 23 | 99572-006 | COVER ASSY - Forward | 1 | |
| 24 | 99569-003 | COVER ASSY - Aft | 1 | |
| -24A | 924-450 | TAPE - For sealing gaps between cover and airframe | AR | |
| 26 | 65165-087 | TUBE | 2 | |
| 27 | 452-561 | BEARING | 1 | |
| 29 | 401-334 | BOLT - (AN4-36A) | 1 | |
| -29A | 690-611 | WASHER - (NAS1149F0463P) | 3 | |
| -29B | 404-530 | NUT - (MS21042-4) | 1 | |
| 30 | 400-861 | BOLT - (AN23-13A) | 1 | |
| -30A | 690-612 | WASHER - (NAS1149FN363P) | 1 | |
| -30B | 404-526 | NUT - (MS21042-3) | 1 | |
| 32 | 400-440 | BOLT - (AN3-6A) | 2 | |
| -32A | 690-612 | WASHER - (NAS1149FN363P) | 2 | |
| -32B | 62833-101 | WASHER - (.56 O. D.) | 2 | |
| -32C | 404-526 | NUT - (MS21042-3) | 2 | |
| 35 | 400-861 | BOLT - (AN23-13A) | 1 | |
| 35A | 690-612 | WASHER - (NAS1149FN363P) | 1 | |
| 35B | 404-526 | NUT - (MS21042-3) | 1 | |
| 36 | 452-571 | BEARING | 1 | |
| 37 | 99854-002 | ACTUATOR ASSY - Condenser door (complete) | 1 | |
| -38 | 466-401 | . Actuator | 1 | |
| 39 | 400-004 | . BOLT - (AN4-7A) | 1 | |
| -40 | 690-611 | . WASHER - (NAS1149F0463P) | 1 | |

-ITEM NOT ILLUSTRATED

When ordering, always specify Part Number, Description, and Serial Number of Aircraft

| Figure and Index Number | Part Number | Nomenclature | No. Req. | Serial Numbers Affected |
|---|---|---|---|---|
| 58- | | | | |
| -40A | 404-530 | . NUT - (MS21042-4) | 1 | |
| 41 | 99853-000 | . TUBE ASSY - Actuator | 1 | |
| 42 | 554-715 | . CLAMP - (AN741-8P) | 1 | |
| 43 | 99867-005 | BELLCRANK ASSY - Condenser | 1 | |
| 44 | 452-570 | . BUSHING - Bronze | 2 | |

-ITEM NOT ILLUSTRATED

THIS PAGE INTENTIONALLY LEFT BLANK

**GRIDS 2B8 THRU 2B10**
**INTENTIONALLY BLANK**

# SECTION XI
# ELECTRICAL SYSTEM GROUP

Reissued: December 10, 2006



Island Enterprises

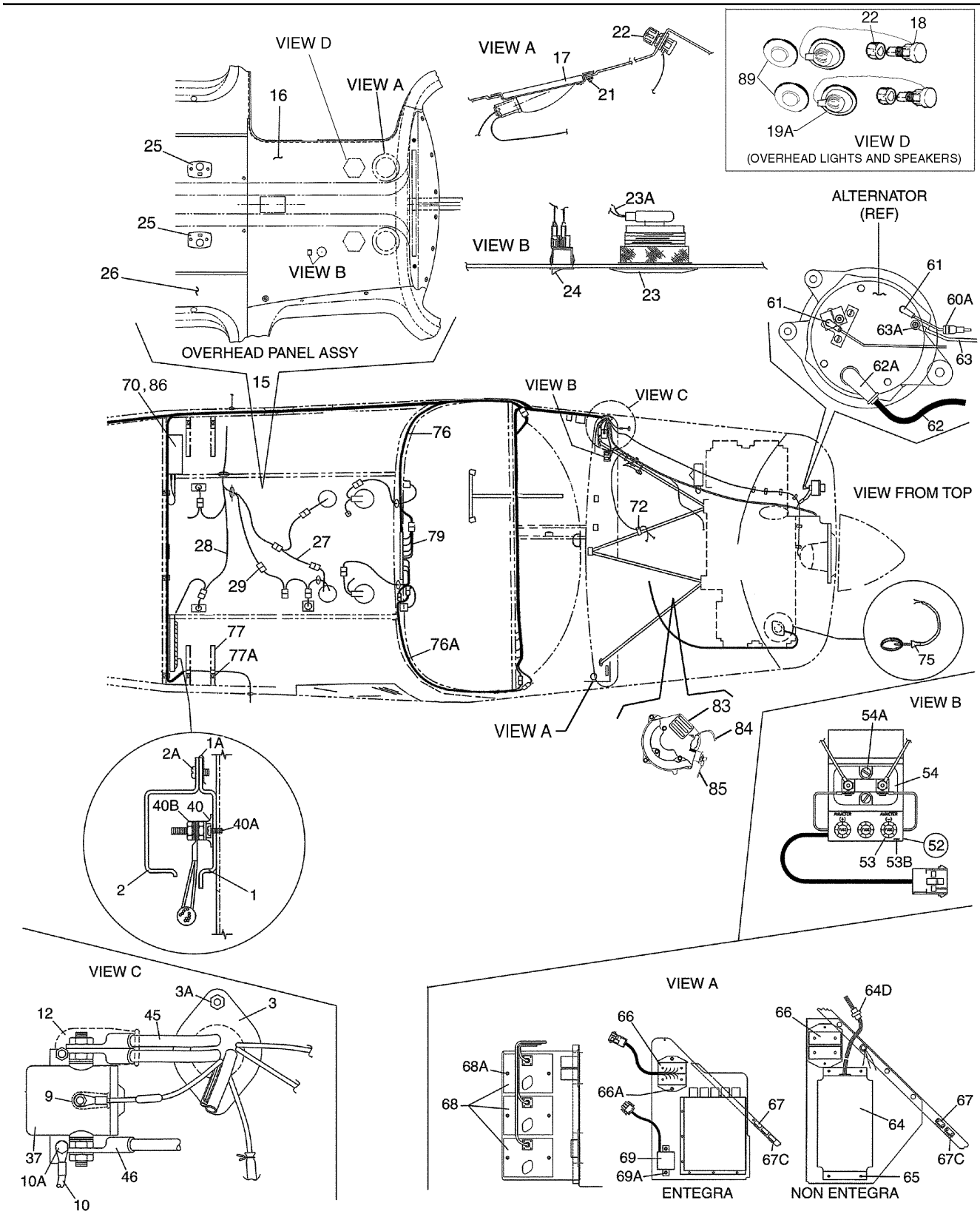


Figure 59. Fwd Electrical System Installation
(Sheet 1 of 2)

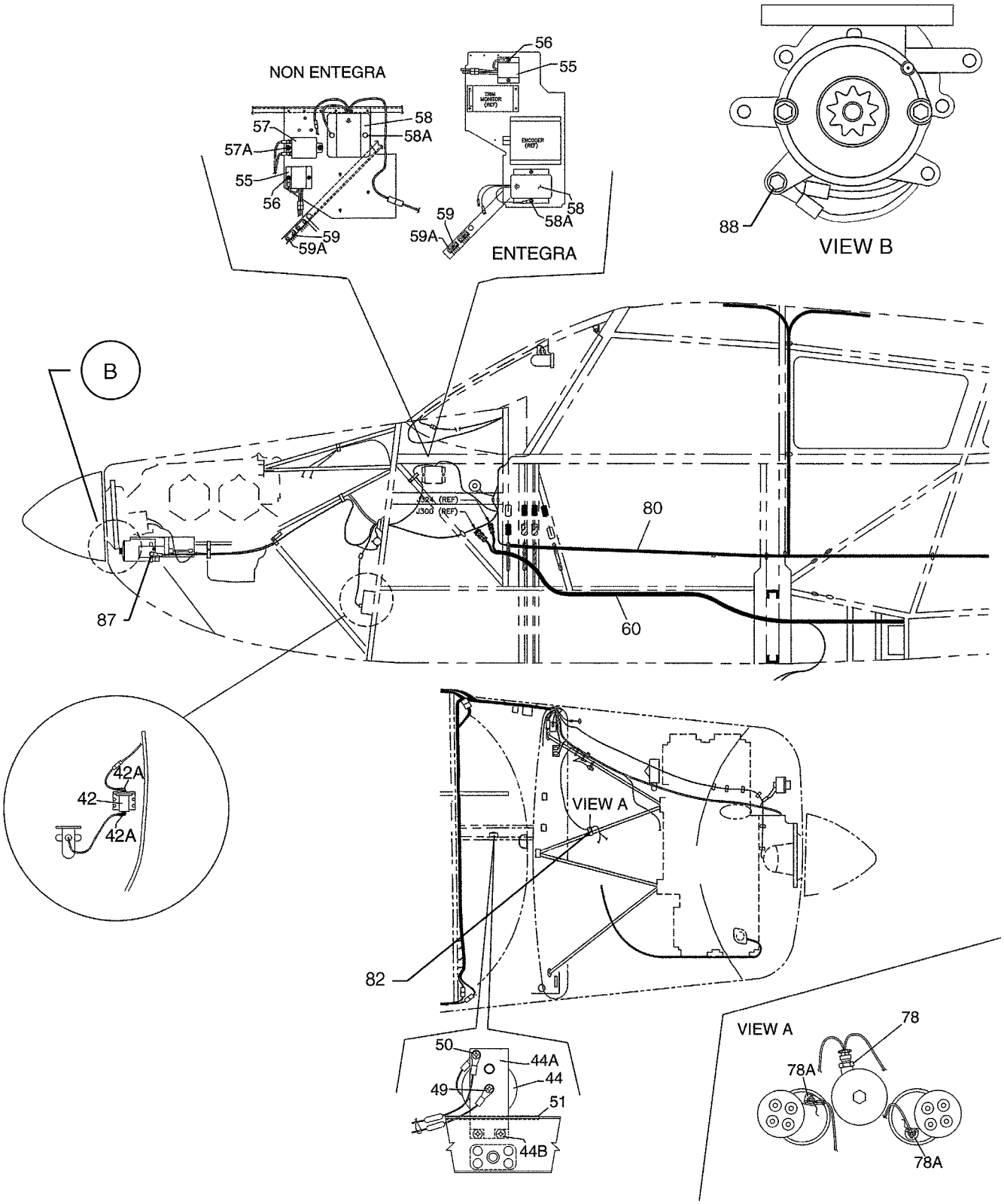


Figure 59. Fwd Electrical System Installation
(Sheet 2 of 2)

| Figure and Index Number | Part Number | Nomenclature | No. Req. | Serial Numbers Affected |
|---|---|---|---|---|
| 59 | 85370 (AG) | DRAWING - Electrical System Installation | | |
| | 101910 (T) | DRAWING - Entegra Electrical System Installation | | 2843598 and up |
| | 84278 (AI) | DRAWING - Interior Installation | | |
| | 35493 (CB) | DRAWING - Pitot Static Installation | | |
| | 84289 (E) | DRAWING - Cockpit Speaker Installation | | |
| 1 | 67404-002 | COVER - Terminal strip (Non Entegra) | 1 | |
| 1A | 506-503 | NUT - (C814-832-1) (Non Entegra) | 3 | |
| 2 | 67404-003 | COVER - Terminal strip (Non Entegra) | 1 | |
| 2A | 419-922 | SCREW - (8 x 3/8 SM PLT TY B) (Non Entegra) | 3 | |
| 3 | 18321-000 | PLATE - Firewall seal | 4 | |
| 3A | 415-535 | SCREW - (MS35206-245) | 2 | |
| -3B | 404-529 | NUT - (MS21042-08) | 2 | |
| -3C | 63915-005 | DISC - Firewall seal | 2 | |
| 4 | 66789-000 | PLATE - Firewall seal | 2 | |
| 9 | 23969-002 | NIPPLE - Electrical | 1 | |
| 10 | 79653-125 | WIRE ASSY | 1 | |
| 10A | 400-002 | BOLT - (AN4-5A) | 2 | |
| -10B | 690-611 | WASHER - (NAS1149F0463P) | 2 | |
| -10C | 690-669 | WASHER - (MS35335-33) | 2 | |
| 12 | 66580-002 | NIPPLE - Terminal (476-695) | 1 | |
| 15 | 83396-002 | OVERHEAD PANEL ASSY - Standard, without air conditioning (SEE NOTE 3) | 1 | |
| 15 | 83396-003 | OVERHEAD PANEL ASSY - Optional, with air conditioning (SEE NOTE 1) | 1 | |
| 16 | 84277-002 | . PANEL - Standard, without air conditioning (See Panels 84277-148 thru -151 for optional colors) | 1 | |
| 16 | 84277-023 | . PANEL - Optional, with air conditioning (SEE NOTE 2) | 1 | |
| 17 | 95229-005 | . LIGHT AND DIMMER ASSY - Overhead floodlight (See Light and Dimmer Assys 95229-007 for optional colors) | 2 | |
| -18 | 95228-003 | . . POTENTIOMETER | 1 | |
| -19 | 84264-002 | . . LIGHT ASSY | 1 | |
| -19A | 572-610 | . . . MAP LIGHT - (A300-W-28) | 1 | |
| -20 | 95227-003 | . . HEAT SINK | 1 | |
| 21 | 407-102 | . WASHER - (AN935-6) | 1 | |
| -21A | 404-528 | . NUT - (MS21042-06) | 1 | |
| 22 | 571-136 | . KNOB | 2 | |
| 23 | 89875-002 | . LIGHT ASSY | 1 | |
| 23A | 89875-004 | . . HARNESS ASSY | 1 | |
| 23B | 572-662 | . . Light - Courtesy | 1 | |
| 24 | 89908-003 | . SWITCH ASSY - Courtesy light | 1 | |
| -24A | 688-374 | . . SWITCH - (62116919) | 1 | |
| 25 | 85311-004 | LIGHT ASSY - Reading (See Light Assys 85311-006 thru -009 for optional colors) | 2 | |
| -25A | 683-502 | . LAMP HOLDER - (33-05110301-0) | 1 | |
| -25B | 472-027 | . LAMP | 1 | |
| -25C | 558-300 | . CUP AND LENS ASSY - (01-0770614-00) | 1 | |
| 26 | 84277-003 | PANEL ASSY - Headliner, Optional with air conditioning | 1 | |
| 26 | 84277-026 | PANEL ASSY - Headliner, Standard without air conditioning | 1 | |
| 27 | 85390-002 | HARNESS ASSY - Dual speakers | 1 | |
| 28 | 85425-004 | HARNESS ASSY - Reading lights | 1 | |
| 29 | 85425-005 | HARNESS ASSY - Courtesy lights | 1 | |
| 37 | 26898-003 | SOLENOID - Starter (Non Entegra) | 1 | |
| 37 | 26898-008 | SOLENOID - Starter (Entegra) | 1 | 2843598 and up |

-ITEM NOT ILLUSTRATED

When ordering, always specify Part Number, Description, and Serial Number of Aircraft

| Figure and Index Number | Part Number | Nomenclature | No. Req. | Serial Numbers Affected |
|---|---|---|---|---|
| 59- | | | | |
| -38 | DELETED | | | |
| -39 | DELETED | | | |
| 40 | 488-545 | STRIP - Terminal (MS27212-1-12) (Non Entegra) | 1 | |
| 40A | 520-045 | SCREW - (MS51861-34) (Non Entegra) | 3 | |
| 40B | 690-639 | WASHER - (NAS1149FN616P) (Non Entegra) | 24 | |
| -40C | 405-406 | NUT - (MS25082-1) (Non Entegra) | 12 | |
| -40D | 408-042 | WASHER - (MS35333-27) (Non Entegra) | 12 | |
| -41 | DELETED | | | |
| 42 | 460-594 | FILTER - Fuel pump noise | 1 | |
| 42A | 23969-002 | NIPPLE - Terminal | 2 | |
| -42B | 415-536 | SCREW - (MS35206-246) | 2 | |
| -42C | 408-105 | WASHER - (MS35335-31) | 2 | |
| -42D | 404-529 | NUT - (MS21042-08) | 2 | |
| -43 | DELETED | | | |
| 44 | 35214-002 | HORN ASSY - Stall warning | 1 | |
| 44A | 35203-000 | BRACKET | 1 | |
| 44B | 415-517 | SCREW - (MS35206-227) | 2 | |
| -44C | 404-528 | NUT - (MS21042-06) (Non Entegra) | 2 | |
| -44C | 406-413 | NUT - (C6607-6Z-1) (Entegra) | 2 | 2843598 and up |
| 45 | 63862-200 | WIRE ASSY - Solenoid to battery (178.50”) | 1 | 2843001 thru 2843414 |
| 45 | 63862-201 | WIRE ASSY - Solenoid to battery (178.50”) | 1 | 2843415 and up |
| 46 | 63862-016 | WIRE ASSY - Solenoid to starter (37.00’’) | 1 | |
| -47 | DELETED | | | |
| -48 | DELETED | | | |
| 49 | 415-531 | SCREW - (MS35206-241) | 1 | |
| -49A | 408-105 | WASHER - (MS35335-31) | 1 | |
| 50 | 415-532 | SCREW - (MS35206-242) | 1 | |
| -50A | 408-105 | WASHER - (MS35335-31) | 1 | |
| -50B | 405-457 | NUT - (MS35649-282) (Non Entegra) | 1 | |
| -50B | 477-729 | NUT - (MS20341-8S) (Entegra) | 1 | 2843598 and up |
| 51 | 63186-007 | SHAPE - RUBBER | 1 | |
| 52 | 89258-008 | FUSE ASSY - (Non Entegra) | 1 | |
| 52 | 89258-009 | FUSE ASSY - (Entegra) | 1 | 2843598 and up |
| 53 | 461-660 | . FUSE HOLDER | 3 | |
| -53A | 461-659 | . FUSE | 3 | |
| 53B | 89258-002 | . PLATE | 1 | |
| 54 | 486-684 | SHUNT - Ammeter | 1 | |
| 54A | 411-534 | SCREW - (MS35207-265) | 2 | |
| -54B | 690-609 | WASHER - (NAS1149F0332P) | 2 | |
| -54C | 408-100 | WASHER - (MS35335-32) | 2 | |
| 55 | 38905-003 | SWITCH ASSY - Alternator out | 1 | |
| -55A | 587-857 | . SWITCH - (A00258-2) | 1 | |
| 56 | 415-535 | SCREW - (MS35206-245) | 2 | |
| -56A | 407-042 | WASHER - (MS35338-42) | 2 | |
| 57 | 584-315 | RELAY - Primer switch (Non Entegra) | 1 | |
| 57A | 415-498 | SCREW - (MS35206-245) (Non Entegra) | 2 | |
| -57B | 690-616 | WASHER - (NAS1149FN832P) (Non Entegra) | 2 | |
| 58 | 68804-005 | CONTROL ASSY - Voltage | 1 | |
| 58A | 411-531 | SCREW - (MS35207-262) | 2 | |
| -58B | 690-609 | WASHER - (NAS1149F0332P) | 2 | |
| | | (Install between screw head and MS35335-32 washer) | | |
| -58C | 408-100 | WASHER - (MS35335-32) | 2 | |
| 59 | 557-111 | GROUND BLOCK - (203540-1) | 2 | |
| 59A | 415-533 | SCREW - (MS35206-243) | 4 | |
| -59B | 408-105 | WASHER - (MS35335-31) | 4 | |

-ITEM NOT ILLUSTRATED

When ordering, always specify Part Number, Description, and Serial Number of Aircraft

Revised: June 10, 2007

| Figure and Index Number | Part Number | Nomenclature | No. Req. | Serial Numbers Affected |
|---|---|---|---|---|
| 59- | | | | |
| -59C | 404-529 | NUT - (MS21042-08) | 4 | |
| -59D | 79595-022 | FUSE ASSY - (Non Entegra) | 1 | |
| 60 | 101902-100 | FUSELAGE HARNESS ASSY - (Entegra) | 1 | 2843598 and up |
| 60A | 461-660 | . FUSE HOLDER - (BUS HWA) | 1 | |
| -60B | 461-659 | . FUSE | 1 | |
| 61 | 23969-002 | NIPPLE - (MS25171-1S) (476-673) | 2 | |
| 62 | 79653-215 | WIRE ASSY - To shunt | 1 | |
| 62A | 35375-000 | NIPPLE - Terminal | 1 | |
| 63 | 69325-200 | WIRE ASSY | 1 | |
| 63A | 411-532 | SCREW - (MS35207-263) | 1 | |
| -63B | 407-043 | WASHER - (MS35338-43) | 1 | |
| -63C | 690-612 | WASHER - (NAS1149F0363P) | 1 | |
| 64 | 85299-005 | CONTROL ASSY - Ammeter, dimmer and voltage monitor (Non Entegra) | 1 | |
| -64A | 475-272 | . LOW VOLTAGE MONITOR | 1 | |
| -64B | 686-814 | . RELAY | 1 | |
| -64C | 456-758 | . DIODE | 1 | |
| 64D | 554-613 | . CLAMP | 1 | |
| 65 | 415-492 | SCREW - (MS35206-227) (Non Entegra) | 4 | |
| 66 | 85378-002 | PITOT HEAT SENSOR ASSY (Non Entegra) | 1 | |
| 66 | 85378-004 | PITOT HEAT SENSOR ASSY (Entegra) | 1 | 2843598 and up |
| 66A | 415-520 | SCREW - (MS35206-230) (Entegra) | 2 | 2843598 and up |
| -66B | 690-640 | WASHER - (NAS1149FN632P) (Entegra) | 2 | 2843598 and up |
| 67 | 415-533 | SCREW - (MS35206-243) | 4 | |
| -67A | 408-105 | WASHER - (MS35335-31) | 4 | |
| -67B | 404-529 | NUT - (MS21042-08) | 4 | |
| 67C | 557-111 | GROUND BLOCK - (203540-1) | 2 | |
| 68 | 557-122 | DIMMER CONTROL | 3 | |
| 68A | 415-558 | SCREW - (MS35206-268) | 6 | |
| -68B | 690-609 | WASHER - (NAS1149F0332P) | 6 | |
| 69 | 89840-009 | LOW VOLTAGE SENSOR ASSY - (Entegra) | 1 | 2843598 and up |
| 69A | 415-520 | SCREW - (MS35206-230) (Entegra) | 2 | 2843598 and up |
| -69B | 690-640 | WASHER - (NAS1149FN632P) (Entegra) | 2 | 2843598 and up |
| 70 | 85359-002 | BOX ASSY - Annunciator panel (complete) (Non Entegra) | 1 | |
| -71 | 85358-005 | . COVER - (Non Entegra) | 1 | |
| -71A | 694-004 | . RESISTOR - (0D102J) (Non Entegra) | 1 | |
| -71B | 584-195 | . RESISTOR - (47K OHM RC20GF473J) (Non Entegra) | 1 | |
| -71C | 686-814 | . RELAY - (Non Entegra) | 1 | |
| -71D | 85301-006 | . SUPPORT - (Non Entegra) | 1 | |
| -71E | 415-503 | . SCREW - (MS35206-213) (Non Entegra) | 4 | |
| -71F | 404-533 | . NUT - (MS21042-04) (Non Entegra) | 4 | |
| 72 | 85358-002 | . BOX ASSY COMPLETE - (Non Entegra) | 1 | |
| -72A | 686-813 | . RELAY - (Y-J2N) (Non Entegra) | 3 | |
| -72B | 686-814 | . RELAY - (Non Entegra) | 1 | |
| -72C | 599-179 | . RESISTOR - (25J560) (Non Entegra) | 11 | |
| -72D | 456-703 | . DIODE - (1N2071A) (Non Entegra) | 6 | |
| -72E | 554-955 | . CLAMP - (Non Entegra) | 1 | |
| -72F | 414-506 | . SCREW - (MS24693-S26) (Non Entegra) | 1 | |
| -72G | 690-639 | . WASHER - (NAS1149FN616P) (Non Entegra) | 1 | |
| -72H | 404-528 | . NUT - (MS21042-06) (Non Entegra) | 1 | |
| -73 | 556-562 | . CONNECTOR - (DBC25SF0) (Non Entegra) | 1 | |
| -73A | 486-103 | . SCREW LOCK - (D20418-2) (Non Entegra) | 1 | |
| -73B | 565-450 | . BACKSHELL - (Non Entegra) | 1 | |
| -73C | 487-086 | . TERMINAL - (030-1953-000) (Non Entegra) | 25 | |
| -74 | 415-533 | SCREW - Box Assy attach (MS35206-243) | 4 | |

-ITEM NOT ILLUSTRATED

When ordering, always specify Part Number, Description, and Serial Number of Aircraft

| Figure and Index Number | Part Number | Nomenclature | No. Req. | Serial Numbers Affected |
|---|---|---|---|---|
| 59- | | | | |
| 75 | 481-403 | PROBE - EGT (Non Entegra) (SEE NOTE 4) | 1 | |
| 76 | 85428-008 | HARNESS ASSY - Left (Non Entegra) | 1 | |
| 76 | 101902-110 | HARNESS ASSY - Left (Entegra) | 1 | 2843598 and up |
| 76A | 101902-111 | HARNESS ASSY - Left (Entegra) | 1 | 2843598 and up |
| 76A | 85428-009 | HARNESS ASSY - Right (Non Entegra) | 1 | |
| 77 | 487-722 | STRAP - (qty 2 left, qty 2 right) | 4 | |
| 77A | 415-544 | SCREW - (MS35206-244) (qty 2 left, qty 2 right) | 4 | |
| -77B | 404-529 | NUT - (MS21042-08) (qty 2 left, qty 2 right) | 4 | |
| 78 | 453-742 | BULB - Oil temperature | 1 | |
| 78A | 23969-002 | NIPPLE - (MS25171-1S) | 2 | |
| 79 | 101902-112 | HARNESS ASSY - (Entegra) | 1 | 2843598 and up |
| 80 | 85425-003 | HARNESS ASSY - (Non Entegra) | 1 | |
| 80 | 101902-116 | HARNESS ASSY - (Entegra) | 1 | 2843598 and up |
| -81 | —- —- | DELETED | | |
| 82 | 454-935 | CLAMP | 1 | |
| -82A | 415-535 | SCREW - (MS21045-08) | 1 | |
| -82B | 404-558 | NUT - (MS21045-08) | 1 | |
| 83 | 602-409 | STANDBY ALTERNATOR | RF | 2843622 and Up |
| 84 | 599-703 | FIELD PROBE CONNECTOR | RF | 2843622 and Up |
| 85 | 686-215 | CURRENT SENSOR ASSY | RF | 2843622 and Up |
| 86 | 101907-002 | ANNUNCIATOR DIMMER ASSY - (With Entegra) | 1 | 2843598 and up |
| -86A | 87485-006 | * HEAT SINK | 1 | |
| -86B | 556-536 | * CONNECTOR - (205841-2) | 1 | |
| -86C | 601-242 | * TRANSISTOR - (MJ11015) | 1 | |
| -86D | 601-243 | * TRANSISTOR - (MJ11016) | 1 | |
| -86E | 694-025 | * RESISTOR - (1ON581) | 4 | |
| -86F | 602-333 | * CAPACITOR - (65F-623) | 2 | |
| 87 | 476-676 | NIPPLE - (MS25171-4S) | 1 | 2843598 and up |
| 88 | 400-004 | BOLT - (AN4-7A) | 1 | 2843598 and up |
| -88A | 690-613 | WASHER - (NAS1149FO432P) | 2 | 2843598 and up |
| -88B | 407-044 | WASHER - (MS35338-44) | 1 | 2843598 and up |
| -88C | 404-530 | NUT - (MS21042-4) | 1 | 2843598 and up |
| 89 | 85430-002 | SPEAKER ASSY - 4 inch | 2 | |
| -89A | 487-192 | SPEAKER | 2 | |
| -89B | 419-920 | SCREW - (8 1/2) | 8 | |
| -89C | 406-447 | CLIP NUT - (NAS395-14-3) | 8 | |

NOTES:

1. SEE OVERHEAD PANEL ASSY'S 83396-014 THRU -017 FOR OPTIONAL COLORS. FOR AIRCRAFT WITH AIR-CONDITIONING INSTALLED REFERENCE FIGURE 57 FOR ADDITIONAL OVERHEAD PANEL ASSY COMPONENTS.

2. SEE OVERHEAD PANEL ASSY'S 84277-180 THRU -183 FOR OPTIONAL COLORS. FOR AIRCRAFT WITH AIR-CONDITIONING INSTALLED REFERENCE FIGURE 57 FOR ADDITIONAL OVERHEAD PANEL ASSY COMPONENTS.

3. SEE OVERHEAD PANEL ASSEMBLIES 83396-10 THRU -013 FOR OPTIONAL COLORS.

4. SEE 88420-002 EGT THERMOCOUPLE UPGRADE KIT FOR SERIAL NUMBERS 2843001 TO 2843649.

-ITEM NOT ILLUSTRATED

When ordering, always specify Part Number, Description, and Serial Number of Aircraft

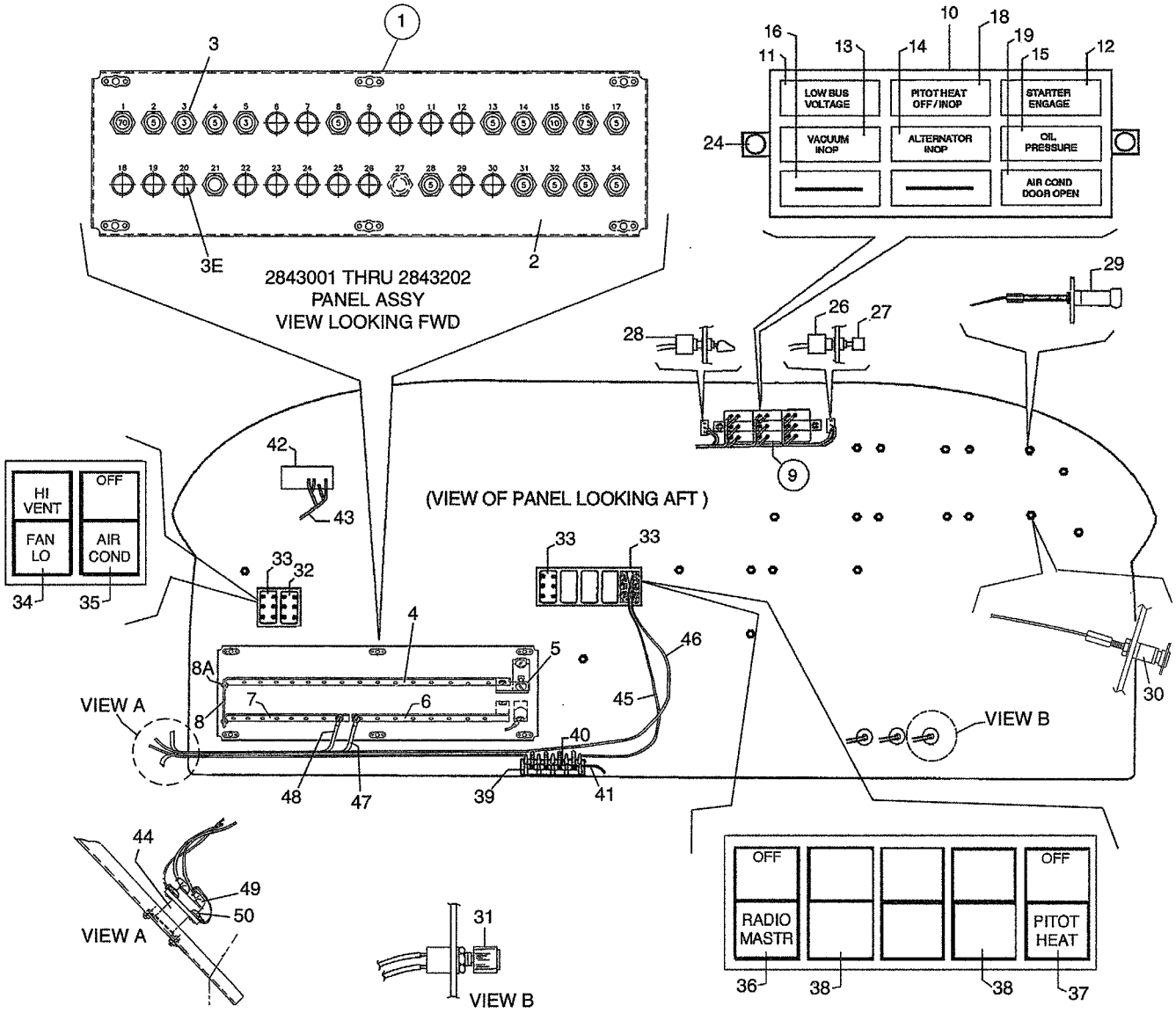


For Entegra Instrument Panel Electrical Installation see figure 60A.

Figure 60. Instrument Panel Electrical Installation

| Figure and Index Number | Part Number | Nomenclature | No. Req. | Serial Numbers Affected |
|---|---|---|---|---|
| 60- | 85370 (AF) | DRAWING - Electrical Installation | | |
| | 36983 (AQ) | DRAWING - Ram Air Installation | | |
| | 39870 (W) | DRAWING - Radio Master Switch Installation | | |
| | 99979 (AS) | DRAWING - Airconditioning Electrical Installation | | |
| | 35493 (CB) | DRAWING - Heated Pitot Static System Installation (Alternate) | | |
| | 100831 (U) | DRAWING - Manual Electric Trim Installation (S-TEC) | | 2843058 and up |
| 1 | 85375-003 | PANEL ASSY - Circuit breaker (complete) | 1 | 2843001 thru 2843202 |
| 1 | 85375-004 | PANEL ASSY - Circuit breaker (complete) | 1 | 2843203 thru 2843414 |
| 1 | 85375-006 | PANEL ASSY - Circuit breaker (complete) | 1 | 2843415 and up |
| 2 | 85374-002 | . PANEL ASSY - Circuit breaker | 1 | |
| 3 | 454-736 | . CIRCUIT BREAKER - 3 amp | 2 | |
| -3A | 454-738 | . CIRCUIT BREAKER - 5 amp | A/R | |
| -3B | 454-739 | . CIRCUIT BREAKER - 7.5 amp | 2 | |
| -3C | 454-732 | . CIRCUIT BREAKER - 10 amp | 3 | |
| -3D | 687-800 | . CIRCUIT BREAKER - 70 amp | 1 | |
| 3E | 581-657 | . PLUG BUTTON | AR | |
| | | (Used when circuit breaker is not installed) | | |
| -3F | 454-797 | . CIRCUIT BREAKER - 20 amp | 1 | |
| 4 | 89276-011 | . BUS | 1 | |
| 5 | 89276-015 | . BUS | 1 | |
| 6 | 89276-019 | . BUS | 1 | 2843415 and up |
| 6 | 89276-013 | . BUS | 1 | 2843001 thru 2843414 |
| 7 | 89276-020 | . BUS | 1 | 2843415 and up |
| 7 | 89276-012 | . BUS | 1 | 2843001 thru 2843414 |
| -7A | 415-513 | . SCREW - (MS35206-226) | AR | |
| 8 | 89276-014 | . BUS | 1 | |
| 8A | 415-518 | . SCREW - (MS35206-228) | 2 | |
| -8B | 690-639 | . WASHER - (NAS1149FN616P) | AR | |
| -8C | 404-491 | . NUT - (MS21045-06) | 2 | |
| 9 | 85372-003 | PANEL ASSY - Annunciator (complete) (Non Entegra) | 1 | |
| -9A | 456-703 | . DIODE - (1N2071A) | 20 | |
| 10 | 89452-004 | . LIGHT ASSY - Indicator | 1 | |
| 11 | 89452-018 | . . CAP - Low bus voltage, red (653-631) | 1 | |
| 12 | 89452-035 | . . CAP - Starter engage, red (654-508) | 1 | |
| 13 | 89452-032 | . . CAP - Vacuum inop, amber | 1 | |
| 14 | 89452-033 | . . CAP - Alternator inop, red | 1 | |
| 15 | 89452-021 | . . CAP - Oil pressure, amber | 1 | |
| 16 | 89452-026 | . . CAP - Green with black line | 4 | |
| -17 | 89452-036 | . CAP - Carb ice (654-514)(optional) | 1 | |
| 18 | 89452-034 | . CAP - Pitot heat off/inop, amber (654-506) | 1 | |
| 19 | 89452-025 | . CAP - Air cond door open, amber (653-633)(optional) | 1 | |
| 24 | 520-046 | SCREW | 2 | |
| -25 | 85304-004 | SWITCH ASSY - Annunciator Panel | 1 | |
| 26 | 688-175 | . SWITCH - Press to test - (MPA-106-F) | 1 | |
| 27 | 653-588 | . CAP - Switch - (C-22) | 1 | |
| 28 | 688-426 | . SWITCH - Day/night - (MTA106D) | 1 | |
| 29 | 75619-006 | LIGHT ASSY - Instrument post | 23 | |
| 30 | 75619-005 | LIGHT ASSY - Instrument post | 1 | |
| -30A | 472-028 | LAMP | 3 | |
| 31 | 571-192 | KNOB - Dimmer control - (RB-67-0-SB-M) | 3 | |
| 32 | 688-298 | SWITCH - (8941K700) | 1 | |
| -32A | 561-027 | FILTER - (1813/31) | 2 | |
| 33 | 688-296 | SWITCH - (8941K699) | 3 | |
| -33A | 561-027 | FILTER - (1813/31) | 6 | |

-ITEM NOT ILLUSTRATED

When ordering, always specify Part Number, Description, and Serial Number of Aircraft

| Figure and Index Number | Part Number | Nomenclature | No. Req. | Serial Numbers Affected |
|---|---|---|---|---|
| 60- | | | | |
| -33B | 472-200 | LAMP | 6 | |
| 34 | 84622-093 | CAP - Switch, hi vent/fan lo | 1 | |
| 35 | 84622-090 | CAP - Switch, air cond (optional) | 1 | |
| 36 | 84622-017 | CAP - Switch, radio mastr (653-516) | 1 | |
| -36A | 411-532 | SCREW - (MS35207-263) | 2 | |
| -36B | 690-612 | WASHER - (NAS1149F0363P) | 2 | |
| -36C | 404-526 | NUT - (MS21042-3) | 2 | |
| 37 | 84622-025 | CAP - Switch, pitot heat | 1 | |
| 38 | 687-211 | SPACER - (47-21971) | 2 | |
| 39 | 588-464 | TERMINAL STRIP - (MS27212-1-4) | 1 | |
| 40 | 35207-000 | BUS | 1 | |
| -40A | 79205-000 | COVER | 1 | |
| 41 | 79151-002 | WIRE ASSY - Ground | 1 | |
| 42 | 548-885 | AMMETER | 1 | |
| -42A | 85305-002 | CONNECTOR SUPPORT | 1 | |
| -42B | 415-507 | SCREW - Connector support (MS35206-217) | 2 | |
| -42C | 404-533 | NUT - Connector support (MS21042-04) | 2 | |
| -42D | 415-505 | SCREW - (MS35206-215) | 2 | |
| -42E | 85305-003 | BUSHING | 2 | |
| -42F | 514-701 | SCREW - Instrument Panel | 2 | |
| 43 | 85328-003 | HARNESS ASSY - Ammeter | 1 | |
| 44 | 584-278 | RELAY - (604H299) | 1 | |
| 45 | 99983-178 | WIRE ASSY | 1 | |
| 46 | 99983-143 | WIRE ASSY - (PR2B20) | 1 | |
| 47 | 99983-101 | WIRE ASSY - (PR1B) | 1 | |
| 48 | 99983-100 | WIRE ASSY - (PR1A) | 1 | |
| 49 | 23969-003 | BOOT | 2 | |
| 50 | 23969-002 | BOOT | 2 | |
| -51 | 67487-005 | DIODE ASSY | 1 | |
| -51A | 456-714 | . DIODE | 1 | |
| -52 | 99983-107 | WIRE ASSY - (PR2A) | 1 | |
| -53 | 651-659 | KIT - Trim monitor - (90402-3) | 1 | 2843058 and up |
| -54 | 651-660 | KIT - Switch and cable - (90402-2) | 1 | 2843058 and up |
| -55 | 651-661 | KIT - Trim servo - (90402-1) | 1 | 2843058 and up |
| -56 | 454-766 | CIRCUIT BREAKER - 2 amp | 1 | 2843058 and up |

-ITEM NOT ILLUSTRATED

When ordering, always specify Part Number, Description, and Serial Number of Aircraft

THIS PAGE INTENTIONALLY LEFT BLANK

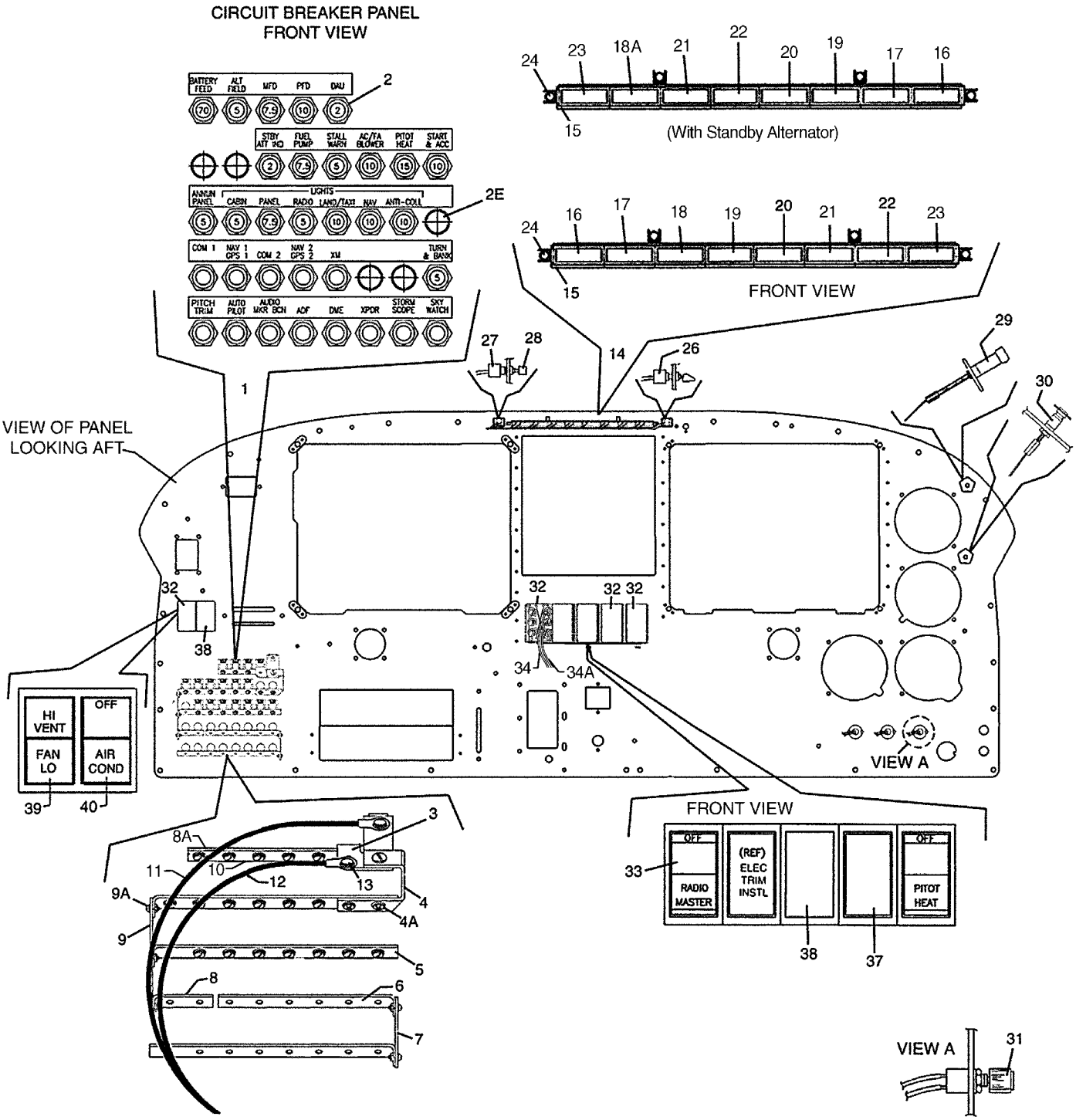


ENTEGRA INSTRUMENT PANEL ELECTRICAL INSTALLATION
2843598 AND UP

Figure 60A. Entegra Instrument Panel Electrical Installation

| Figure and Index Number | Part Number | Nomenclature | No. Req. | Serial Numbers Affected |
|---|---|---|---|---|
| 60A- | 101910 (T) | DRAWING - Entegra Electrical System Installation | | 2843598 and up |
| | 100831 (U) | DRAWING - Manual Electric Trim Installation (S-TEC) | | 2843058 and up |
| | 36983 (AU) | DRAWING - Ram Air Installation | | |
| | 39870 (W) | DRAWING - Radio Master Switch Installation | | |
| | 99979 (AS) | DRAWING - Airconditioning Electrical Installation | | |
| | 35493 (CB) | DRAWING - Heated Pitot Static System Installation (Alternate) | | |
| | 85519 (G) | DRAWING - Carburetor Ice Detector Installation | | |
| 1 | 101906-006 | PANEL ASSY - Circuit Breaker (With Entegra and Standby Alternator) | 1 | 2843622 and Up |
| 1 | 101906-003 | PANEL ASSY - Circuit Breaker (complete) | 1 | |
| 2 | 454-766 | . CIRCUIT BREAKER - 2 AMP | 2 | |
| -2A | 454-738 | . CIRCUIT BREAKER - 5 AMP | 5 | |
| -2B | 454-739 | . CIRCUIT BREAKER - 7.5 AMP | 2 | |
| -2C | 454-732 | . CIRCUIT BREAKER - 10 AMP | 5 | |
| -2D | 687-800 | . CIRCUIT BREAKER - 70 AMP | 1 | |
| -2E | 581-657 | . PLUG BUTTON - (P-437) (Used when circuit breaker is not installed) | A/R | |
| 3 | 89276-015 | . BUS | 1 | |
| 4 | 89276-030 | . BUS | 1 | |
| 4A | 415-518 | . SCREW - (MS35206-228) | 2 | |
| -4B | 690-639 | . WASHER - (NAS1149FN616P) | 2 | |
| -4C | 404-528 | . NUT - (MS21042-06) | 2 | |
| 5 | 89276-028 | . BUS | 3 | |
| 6 | 89276-029 | . BUS | 1 | |
| 7 | 89276-027 | . BUS | 1 | |
| 8 | 89276-025 | . BUS | 1 | |
| 8A | 89276-035 | . BUS - (Required when Standby Alternator is installed) | 1 | 2843622 and Up |
| 9 | 89276-026 | . BUS | 1 | |
| 9A | 415-518 | . SCREW - (MS35206-228) | 5 | |
| -9B | 690-639 | . WASHER - (NAS1149FN616P) | 5 | |
| -9C | 404-528 | . NUT - (MS21042-06) | 5 | |
| 10 | 89276-024 | . BUS | 1 | |
| 11 | 79653-261 | WIRE ASSY | 1 | |
| 12 | 79653-262 | WIRE ASSY | 1 | |
| 13 | 401-307 | BOLT - (AN4-4A) | 1 | |
| -13A | 404-530 | NUT - (MS21042-4) | 1 | |
| 14 | 85372-005 | PANEL ASSY - Annunciator | 1 | |
| 14 | 85372-009 | PANEL ASSY - Annunciator | 1 | 2843622 and Up |
| -14A | 456-703 | . DIODE - (1N2071A) | 18 | |
| 15 | 602-332 | . ANNUNCIATOR HOUSING - (90-42154) | 1 | |
| 16 | 89452-035 | . CAP - Starter engage (654-508) (90-42209-31) | 1 | |
| 17 | 89452-034 | . CAP - Pitot Heat Off / INOP (654-506) (90-42209-56) | 1 | |
| 18 | 89452-026 | . CAP - Black line (654-559) (90-42209-22) | A/R | |
| 18A | 89452-051 | . CAP - Standby Alternator | 1 | 2843622 and Up |
| 19 | 89452-025 | . CAP - Air Conditioning Door Open (optional) (653-633) (90-42209-50) | 1 | |
| 20 | 89452-036 | . CAP - Carb Ice (optional) (654-514) (90-42209-64) | 1 | |
| 21 | 89452-018 | . CAP - Low Bus Voltage (653-631) (90-42209-27) | 1 | |
| 22 | 89452-021 | . CAP - Oil Pressure (766-508) (90-42209-13) | 1 | |
| 23 | 766-528 | . CAP - Alternator INOP (90-42209-58) | 1 | |
| 24 | 520-046 | SCREW | 2 | |
| -25 | 101902-107 | HARNESS ASSY - Instrument Panel | REF | 2843598 and up |
| -25A | 461-684 | . FUSE - (GMW - 1 Amp) | 2 | |
| -25B | 461-660 | . FUSEHOLDER - (HWA) | 2 | |
| 26 | 587-984 | . SWITCH - Day/night (7301SYZQE) | 1 | |

-ITEM NOT ILLUSTRATED

When ordering, always specify Part Number, Description, and Serial Number of Aircraft

| Figure and Index Number | Part Number | Nomenclature | No. Req. | Serial Numbers Affected |
|---|---|---|---|---|
| 60A- | | | | |
| 27 | 588-178 | . SWITCH - Press to test (MPA-206R) | 1 | |
| 28 | 653-588 | CAP - Switch, Press to test (C-22) | 1 | |
| 29 | 75619-006 | POST LIGHT - (572-625) | 11 | |
| 30 | 75619-005 | POST LIGHT - (572-615) | 1 | |
| | | (Replace existing 6V lamp with 28V lamp) | | |
| -30A | 472-028 | LAMP - (28V) | 1 | |
| 31 | 571-192 | KNOB - (RB-67-0-SB-M) | 3 | |
| 32 | 688-296 | SWITCH - Rocker (8941K699) | 4 | |
| -32A | 472-200 | LAMP - (28V) | 8 | |
| -32B | 561-027 | FILTER - (1813/31) | 8 | |
| 33 | 653-516 | CAP - Switch, Radio Master (84622-017) | 1 | |
| 34 | 99983-184 | WIRE ASSY - Radio Master Switch, to ground | 1 | 2843598 and Up |
| | | (Used when standby alternator is installed). | | |
| 34A | 99983-143 | WIRE ASSY - Radio master switch (PR2B20) | 1 | |
| -34B | 584-278 | RELAY - (6041H299) | 1 | |
| -34C | 23969-002 | BOOT | 2 | |
| -34D | 23969-003 | BOOT | 2 | |
| -35 | 99983-100 | WIRE ASSY - Circuit breaker panel (PR1A10) | 1 | |
| -35A | 99983-101 | WIRE ASSY - Circuit breaker panel (PR1B10) | 1 | |
| 36 | 653-524 | CAP - Switch, Pitot Heat (84622-025) | 1 | |
| 37 | 654-513 | CAP - Switch, Carb Ice Detector (84622-094) | 1 | |
| 38 | 688-298 | SWITCH - (8941K700) | 1 | |
| -38A | 561-027 | FILTER - (1813/31) | 4 | |
| -38B | 472-200 | BULB | 4 | |
| 39 | 654-505 | CAP - Switch, hi vent/fan lo (84622-093) | 1 | |
| 40 | 654-502 | CAP - Switch, air conditioning (84622-090) | 1 | |
| -41 | 651-659 | KIT - Trim monitor - (90402-3) | 1 | 2843058 and up |
| -42 | 651-660 | KIT - Switch and cable - (90402-2) | 1 | 2843058 and up |
| -43 | 651-661 | KIT - Trim servo - (90402-1) | 1 | 2843058 and up |
| -44 | 454-766 | CIRCUIT BREAKER - 2 amp | 1 | 2843058 and up |
| -45 | 85427-003 | HARNESS ASSY - Post lights (Entegra) | 1 | 2843598 and up |

-ITEM NOT ILLUSTRATED

When ordering, always specify Part Number, Description, and Serial Number of Aircraft

THIS PAGE INTENTIONALLY LEFT BLANK

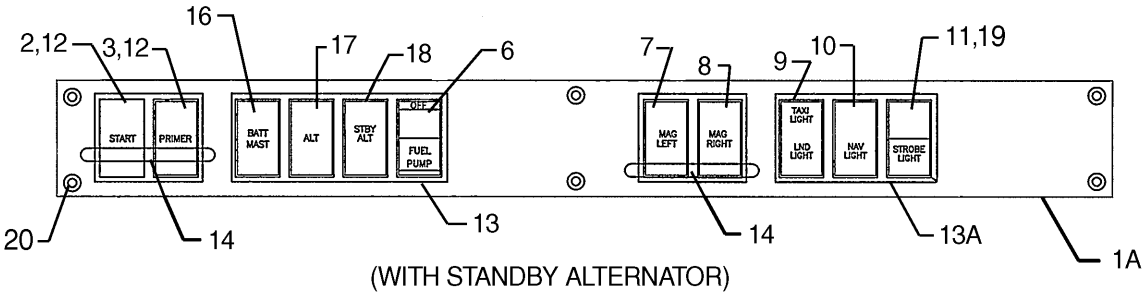


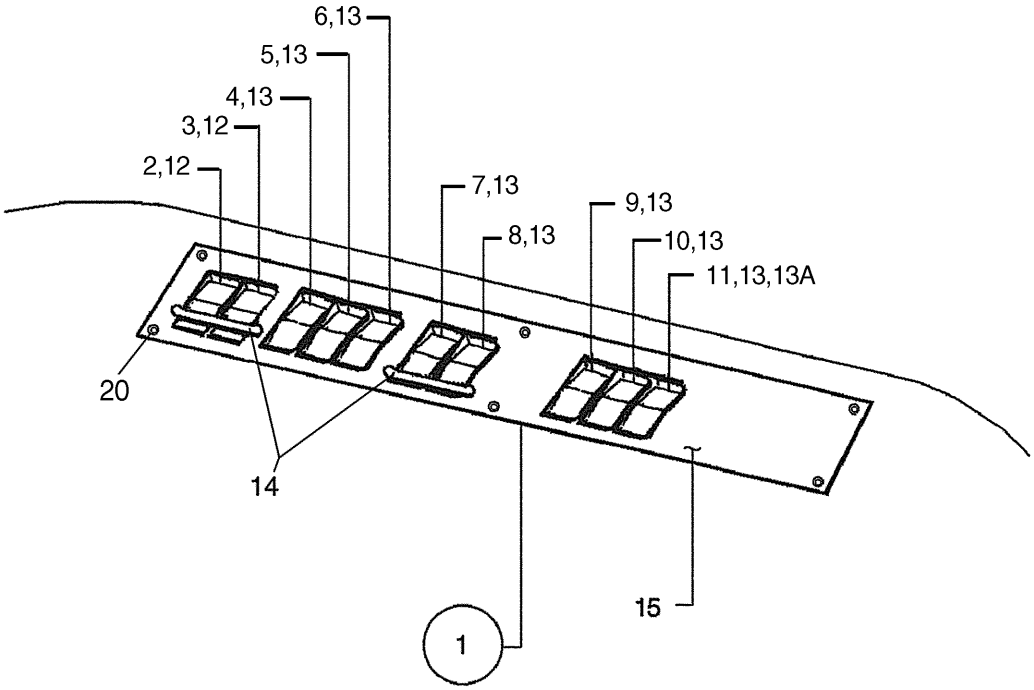


Figure 61. Overhead Switch Panel

| Figure and Index Number | Part Number | Nomenclature | No. Req. | Serial Numbers Affected |
|---|---|---|---|---|
| 61- | 85370 (AF) | DRAWING - Electrical Installation | | |
| | 101910 (T) | DRAWING - Entegra Electrical System Installation | | 2843598 and up |
| 1 | 85429-002 | PANEL ASSY - Overhead Switch w/o Fin Strobe (Non Entegra) | 1 | 2843001 thru 2843114; 2843130 thru 2843597 |
| 1 | 85429-003 | PANEL ASSY - Overhead Switch with Fin Strobe (Non Entegra) | 1 | 2843115 thru 2843129; 2843203 thru 2843597 |
| 1 | 85429-004 | PANEL ASSY - Overhead Switch w/o Fin Strobe (Entegra) | 1 | 2843598 and up |
| 1 | 85429-005 | PANEL ASSY - Overhead Switch with Fin Strobe (Entegra) | 1 | 2843598 and up |
| 1 | 85429-006 | PANEL ASSY - Overhead Switch w/o Fin Strobe (Non Entegra) | 1 | 2843598 and up |
| 1 | 85429-007 | PANEL ASSY - Overhead Switch w/o Fin Strobe (Non Entegra) | 1 | 2843598 and up |
| 2 | 84622-034 | . CAP - Switch (Start) (653-527) | 1 | |
| 3 | 84622-035 | . CAP - Switch (Prime) (653-528) | 1 | |
| 4 | 84622-084 | . CAP - Switch (Off/Batt Mast) (654-495) | 1 | |
| 5 | 84622-085 | . CAP - Switch (Off/Alt) (654-496) | 1 | |
| 6 | 84622-068 | . CAP - Switch (Off/Fuel Pump) (654-480) | 1 | |
| 7 | 84622-008 | . CAP - Switch (Off Mag Light) (653-507) | 1 | |
| 8 | 84622-009 | . CAP - Switch (Off Mag Right) (653-508) | 1 | |
| 9 | 84622-010 | . CAP - Switch (Off Taxi/Lnd Light) (653-509) | 1 | |
| 10 | 84622-013 | . CAP - Switch (Off/Nav Light) (653-512) | 1 | |
| 11 | 84622-012 | . CAP - Switch (Off/Strobe Light) (653-511) | 1 | |
| | | (Replace with 84622-096 when opt Fin Strobe is installed) | | |
| 11 | 84622-096 | . CAP - Switch (Off Strobe Lights/Fin Strobe) (688-481) | 1 | |
| 12 | 688-297 | . SWITCH - (8941K701) | 2 | |
| -12A | 561-027 | . FILTER - (1813/31) | 4 | |
| -12B | 472-200 | . LAMP | 4 | |
| 13 | 688-296 | . SWITCH - (8941K699) | 7/8 | |
| 13A | 688-298 | . SWITCH - (8941K700) | 1 | |
| | | (Used when option Fin Strobe is installed) | | |
| -13B | 561-027 | . FILTER - (1813/31) | 16 | |
| -13C | 472-200 | . LAMP | 16 | |
| 14 | 53916-000 | . GUARD | 2 | |
| -14A | 415-504 | . SCREW - (MS35206-214) | 4 | |
| 15 | 84265-002 | . SWITCH PLATE | 1 | |
| 15 | 84265-009 | . SWITCH PLATE - (With standby alternator) | 1 | 2843622 and Up |
| 16 | 84622-004 | . CAP - (653-504) (With standby alternator) | 1 | 2843622 and Up |
| 17 | 84622-064 | . CAP - (653-441) (With standby alternator) | 1 | 2843622 and Up |
| 18 | 84622-099 | . CAP - (688-731) (With standby alternator) | 1 | 2843622 and Up |
| 19 | 84622-096 | . CAP - (688-481) (With standby alternator) | 1 | 2843622 and Up |
| 20 | 515-712 | SCREW - (Entegra) | 6 | |
| 20 | 510-306 | SCREW - (Non Entegra) | 6 | |

-ITEM NOT ILLUSTRATED

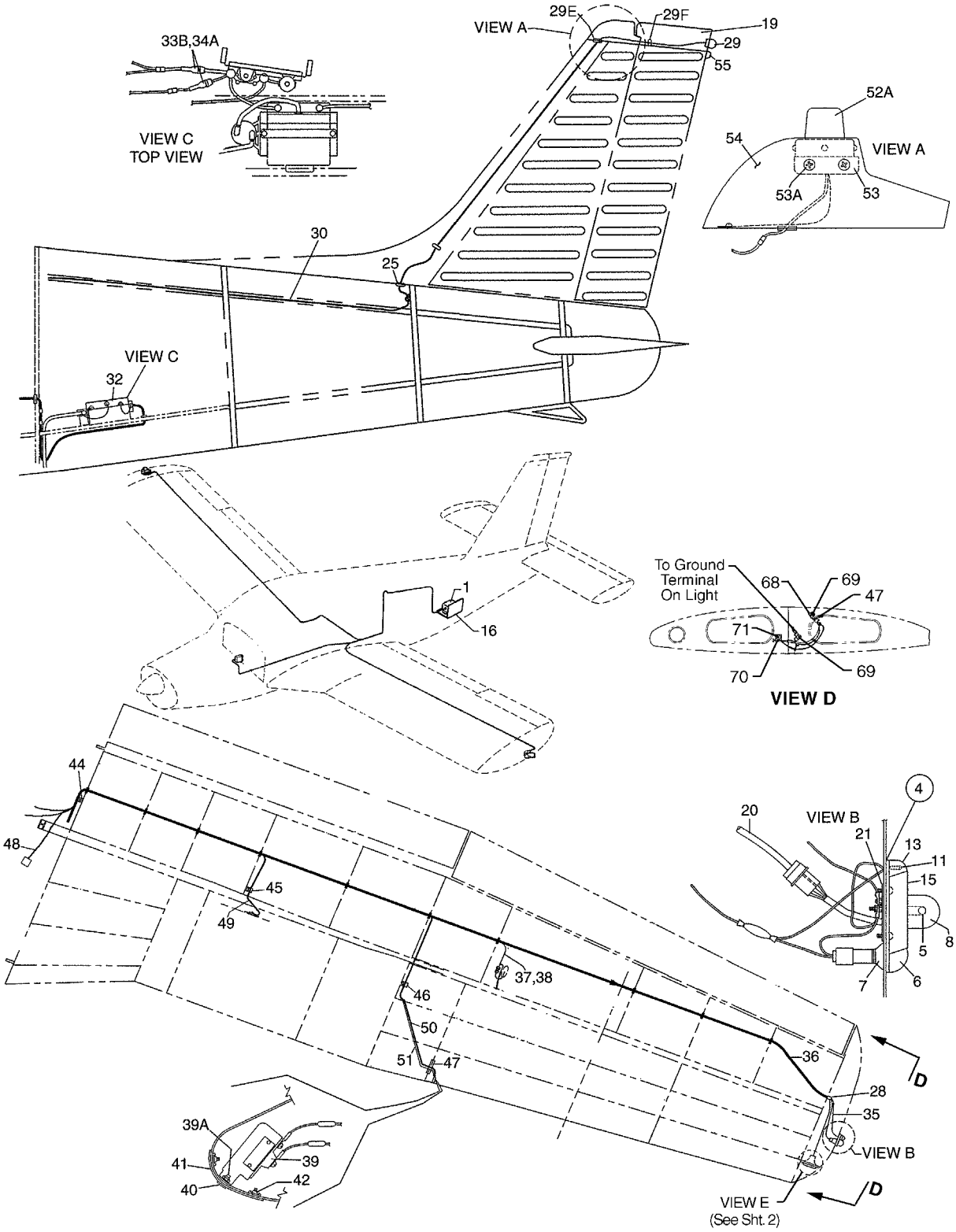


Figure 62. Wing & Aft Electrical System Installation and Lighting
Sheet 1 of 2

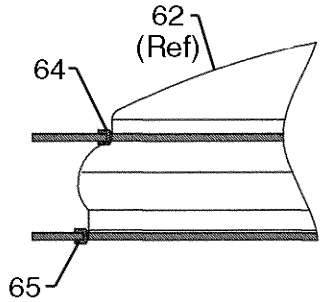


VIEW F

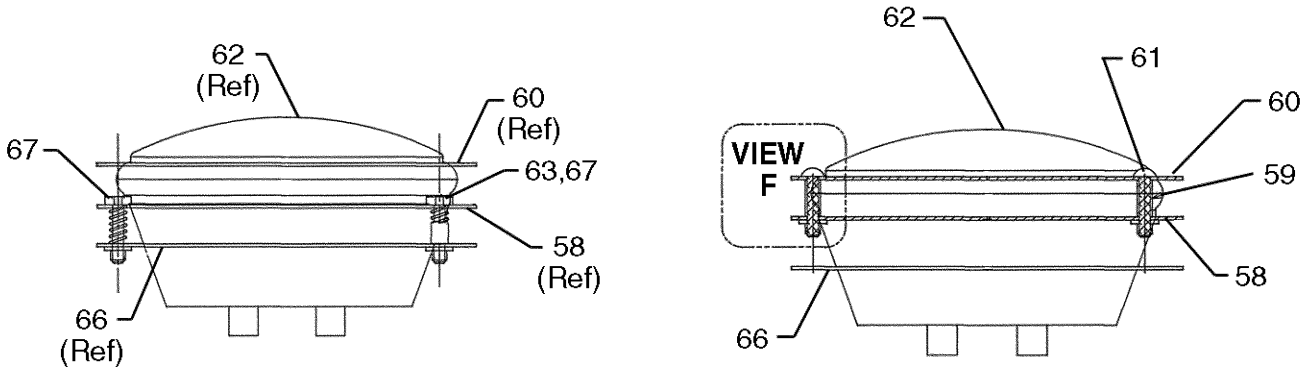


VIEW E

Figure 62. Wing & Aft Electrical System Installation and Lighting
Sheet 2 of 2

| Figure and Index Number | Part Number | Nomenclature | No. Req. | Serial Numbers Affected |
|---|---|---|---|---|
| 62 | 36798 (AS) | DRAWING - Wing Tip Strobe Lights Installation (Without Entegra) | | |
| | 104296 (M) | DRAWING - Exterior Wing and Fin Lighting Installation (With Entegra) | | 2843598 and up |
| | 38643 (Z) | DRAWING - Wing Installation | | |
| | 85370 (AF) | DRAWING - Electrical System Installation (Without Entegra) | | |
| | 101910 (T) | DRAWING - Entegra Electrical System Installation | | |
| 1 | 481-247 | POWER SUPPLY - Strobe lights - (A413A HDA-CF-14/28) | 1 | |
| -1A | 554-435 | CABLE - To Fin Strobe (Non Entegra) (A-417-1/155) | 1 | |
| -1A | 653-623 | CABLE - To Fin Strobe (Entegra) (01-0250042-02) | 1 | 2843598 and up |
| 4 | 572-593 | LIGHT ASSY - Red navigation and white strobe, left wing tip (shielded) - (90071-00) | 1 | |
| -4A | 572-592 | LIGHT ASSY - Green navigation and white strobe, right wing tip (shielded) - (90071-01) | 1 | |
| 5 | 762-003 | * TUBE ASSY - Flash tip | 1 | |
| -5A | 755-076 | * GASKET - Wing strobe | 1 | |
| 6 | 751-202 | * LENS - Navigation, red | 1 | |
| -6A | 751-201 | * LENS - Navigation, green | 1 | |
| 7 | 553-494 | * LAMP | 1 | |
| -7A | 755-075 | * GASKET - Navigation light | 1 | |
| 8 | 761-253 | * LENS AND RETAINER ASSY - Wing tip strobe, sheilded, white | 1 | |
| -8A | 761-254 | * LENS AND RETAINER ASSY - Wing tip strobe, sheilded, red | 1 | |
| 11 | 761-208 | *. LAMP - Navigation light assy - (34-0428070-64) | 1 | |
| -11A | 762-426 | * SOCKET ASSY - Navigation light - (02-0350260-00) | 1 | |
| -11B | 755-096 | * GASKET - Navigation light | 1 | |
| 13 | 761-255 | * LENS - Navigation light - (A615) | 1 | |
| 15 | 762-616 | * RETAINER - Light lens | 1 | |
| 16 | 99031-000 | BRACKET ASSY - Power supply mounting | 1 | |
| -17 | 69325-156 | WIRE ASSY - To power supply | 1 | |
| -18 | 79653-095 | WIRE ASSY - Ground | 1 | |
| 19 | 99868-000 | TIP - Rudder, fairing assy (optional on Non Entegra aircraft, (standard on Entegra aircraft) | 1 | |
| 19 | 99032-002 | FIN - Tip assy (standard on Non Entegra aircraft) | 1 | |
| 20 | 554-336 | CABLE ASSY - Strobe, left wing - (A417-1/335) | 1 | |
| -20A | 554-330 | CABLE ASSY - Strobe, right wing - (A417-1/400) | 1 | |
| 21 | 63889-008 | GROUND ASSY | 1 | |
| 25 | 463-422 | BUSHING - Snap | 1 | |
| 28 | 554-955 | CLAMP | 2 | |
| 29 | 63886-004 | TAIL LIGHT ASSY - (Optional) | 1 | |
| -29A | 572-634 | * TAIL LIGHT - (A555A-V-28) | 1 | |
| -29B | 415-521 | SCREW - (MS35206-231) (With Entegra) | 1 | 2843598 and up |
| -29B | 419-954 | SCREW - (Optional) (#6 x 1/4 TYP B THD) | 1 | |
| -29C | 690-660 | WASHER - (MS35335-30) | 1 | |
| -29D | 506-541 | NUT - (MA27130-A7K) (With Entegra) | 1 | 2843598 and up |
| 29E | 434-134 | GROMMET - (Optional) (MS35489-11) | 1 | |
| 29F | 463-389 | GROMMET - (Optional) (11-284) | 1 | |
| 30 | 68807-200 | WIRE ASSY | 1 | |
| 32 | 85418-002 | BATTERY INSTALLATION (See Figure 63 for component parts) | RF | 2843001 thru 2843414 |
| 32 | 104463-002 | BATTERY INSTALLATION (See Figure 63 for component parts) | RF | 2843415 and up |
| -33 | 79595-020 | FUSE ASSY - (Non Entegra) (See items 62-34 thru 34C for aircraft with Entegra) | 1 | |
| -33A | 79595-025 | FUSE ASSY - (Non Entegra) (See items 62-34 thru 34C for aircraft with Entegra) | 1 | |
| 33B | 465-258 | * FUSE HOLDER - (155020) | 1 | |

-ITEM NOT ILLUSTRATED

When ordering, always specify Part Number, Description, and Serial Number of Aircraft

| Figure and Index Number | Part Number | Nomenclature | No. Req. | Serial Numbers Affected |
|---|---|---|---|---|
| 62- | | | | |
| -33C | 461-629 | * FUSE - (311005) | 1 | |
| -34 | 101902-100 | FUSELAGE HARNESS ASSY - (Entegra) | 1 | 2843598 and up |
| 34A | 461-660 | * FUSE HOLDER - (HWA) - (Entegra) | 1 | 2843598 and up |
| -34B | 461-684 | * FUSE - (GMW 1 AMP) - (Entegra) | 1 | 2843598 and up |
| -34C | 461-659 | * FUSE - (GMW 5 AMP) - (Entegra) | 1 | 2843598 and up |
| 35 | 63889-008 | WIRE ASSY - Left and right (Non Entegra) | 1 | |
| 35 | 101902-119 | WIRE ASSY - Left and right (Entegra) | 1 | 2843598 and up |
| 36 | 78140-047 | WIRE ASSY - Left (Non Entegra) | 1 | |
| 36 | 101902-104 | WIRE ASSY - Left (Entegra) | 1 | 2843598 and up |
| 36A | 101902-104 | WIRE ASSY - Right (Entegra) | 1 | 2843598 and up |
| 36A | 78140-046 | WIRE ASSY - Right (Non Entegra) | 1 | |
| 37 | 79653-212 | WIRE ASSY - Left (Non Entegra) | 1 | |
| -37A | 79653-213 | WIRE ASSY - Right (Non Entegra) | 1 | |
| 38 | 101902-104 | WING HARNESS - Left (Entegra) | 1 | 2843598 and up |
| 39 | 450-742 | DETECTOR - Lift (C52207-4) | 1 | |
| 39A | 414-781 | SCREW - (MS24693-C50) | 2 | 2843001 thru 2843597 |
| 39A | 414-735 | SCREW - (MS24693-C26) | 2 | 2843598 and up |
| -39B | 690-640 | WASHER - (NAS1149FN632P) | 2 | |
| -39C | 404-526 | NUT - (MS21042-06) | 2 | |
| -39D | 688-427 | SEAL - (AZTSJN037020X) (Install with contour side facing outboard, between lift detector and plate) | 1 | |
| 40 | 450-741 | DECAL - Lift detector (C52207-3) | 1 | |
| 41 | 19807-002 | PLATE - Lift detector mounting (450-745) | 1 | |
| 42 | 414-781 | SCREW - (MS24693-C50) | 4 | |
| 43 | 414-508 | SCREW - (MS24693-S28) | 2 | |
| -43A | 690-640 | WASHER - (NAS1149FN632P) | 2 | |
| -43B | 404-491 | NUT - (MS21045-06) | 2 | |
| 44 | 554-953 | CLAMP - Left and right | 2 | |
| -44A | 415-544 | SCREW - (MS35206-244) (Non Entegra) | 2 | |
| -44A | 415-498 | SCREW - (MS35206-245) (Entegra) | 2 | 2843598 and up |
| -44B | 690-616 | WASHER - (NAS1149FN832P) | 2 | |
| 45 | 654-221 | CLAMP - Left and right (Entegra) | 2 | 2843598 and up |
| -45A | 415-498 | SCREW - (MS35206-245) | 2 | |
| -45B | 690-616 | WASHER - (NAS1149FN832P) | 2 | |
| -45C | 404-558 | NUT - (MS21042-08) | 2 | |
| 46 | 454-927 | CLAMP | 1 | |
| -46A | 415-498 | SCREW - (MS35206-245) | 1 | |
| -46B | 408-105 | WASHER - (MS35335-31) | 1 | |
| -46C | 404-558 | NUT - (MS21042-08) | 1 | |
| 47 | 189-625 | GROMMET | 2 | |
| 48 | 85425-006 | HARNESS ASSY - Landing/Taxi Light, left (Non Entegra) | 1 | |
| -48A | 85425-007 | HARNESS ASSY - Landing/Taxi Light, right (Non Entegra) | 1 | |
| 49 | 79653-210 | WIRE ASSY - Left (Non Entegra) | 1 | |
| -49A | 79653-211 | WIRE ASSY - Right (Non Entegra) | 1 | |
| 50 | 69325-020 | WIRE ASSY - To terminal (Non Entegra) | 1 | |
| 51 | 78140-080 | WIRE ASSY - To ground (Non Entegra) | 1 | |
| -52 | 36789-040 | FIN STROBE ASSY - Remote (Non Entegra) | 1 | |
| -52 | 104138-002 | FIN STROBE ASSY - (Entegra) | 1 | 2843598 and up |
| 52A | 683-504 | * LIGHT ASSY - (01-0790111-02) (Entegra) | 1 | 2843598 and up |
| 52A | 472-899 | * LIGHT ASSY - (A470A-D-R) (Non Entegra) | 1 | |
| 53 | 104176-002 | * BRACKET ASSY - Fin light (Entegra) | 1 | 2843598 and up |
| 53A | 414-781 | * SCREW - (MS24693-C50) (Entegra) | 1 | 2843598 and up |
| -53B | 598-395 | * WASHER - (Entegra) | 1 | 2843598 and up |
| 54 | 83222-004 | * FIN TIP - (Entegra) | 1 | 2843598 and up |
| 55 | 553-518 | BUTTON - Plug - (HS-50726) | 1 | |

-ITEM NOT ILLUSTRATED

When ordering, always specify Part Number, Description, and Serial Number of Aircraft

| Figure and Index Number | Part Number | Nomenclature | No. Req. | Serial Numbers Affected |
|---|---|---|---|---|
| 62- | | | | |
| -56 | 85402-002 | WING TIP ASSY - Landing/Recognition Light, left wing | 1 | |
| -56A | 85402-003 | WING TIP ASSY - Taxi/Recognition Light, right wing | 1 | |
| 57 | 85402-017 | * LIGHT ASSY - Landing/recognition, left wing tip | 1 | |
| -57A | 85402-011 | * LIGHT ASSY - Taxi/recognition, right wing tip | 1 | |
| 58 | 85402-016 | * * BACKPLATE - Left | 1 | |
| -58A | 85402-010 | * * BACKPLATE - Right | 1 | |
| 59 | 85402-009 | * * BUSHING | 3 | |
| 60 | 85402-008 | * * RETAINER RING | 1 | |
| 61 | 415-514 | * * SCREW - (MS35206-234) | 3 | |
| 62 | 472-071 | * * BULB - (GE-4594) | 1 | |
| 63 | 65003-055 | * * BUSHING | 1 | |
| 64 | 63189-038 | * * SEAL | 1 | |
| 65 | 63189-039 | * * SEAL | 1 | |
| 66 | 85402-014 | * BAFFLE - Left | 1 | |
| -66A | 85402-015 | * BAFFLE - Right | 1 | |
| 67 | 402-763 | * BOLT - (NAS428-3-14) | 3 | |
| -67A | 64704-000 | * SPRING COIL | 3 | |
| -67B | 406-829 | * NUTPLATE - (NAS686-A3) | 3 | |
| 68 | 487-608 | STRAP N.S. | 1 | 2843598 and up |
| 69 | 415-498 | SCREW - (MS35206-245) N.S. | 2 | 2843598 and up |
| -69A | 690-616 | WASHER - F.S. (NAS1149FN832P) | 2 | 2843598 and up |
| -69B | 404-558 | NUT - F.S. (MS21042-08) | 2 | 2843598 and up |
| 70 | 554-955 | CLAMP - N.S. | 1 | 2843598 and up |
| 71 | 415-498 | SCREW - N.S. (MS35206-245) | 1 | 2843598 and up |
| -71A | 690-616 | WASHER - (NAS1149FN832P) ((1) under screw and (1) under nut) | 2 | 2843598 and up |
| -71B | 404-558 | NUT - F.S. (MS21042-08) | 1 | 2843598 and up |

-ITEM NOT ILLUSTRATED

When ordering, always specify Part Number, Description, and Serial Number of Aircraft

THIS PAGE INTENTIONALLY LEFT BLANK

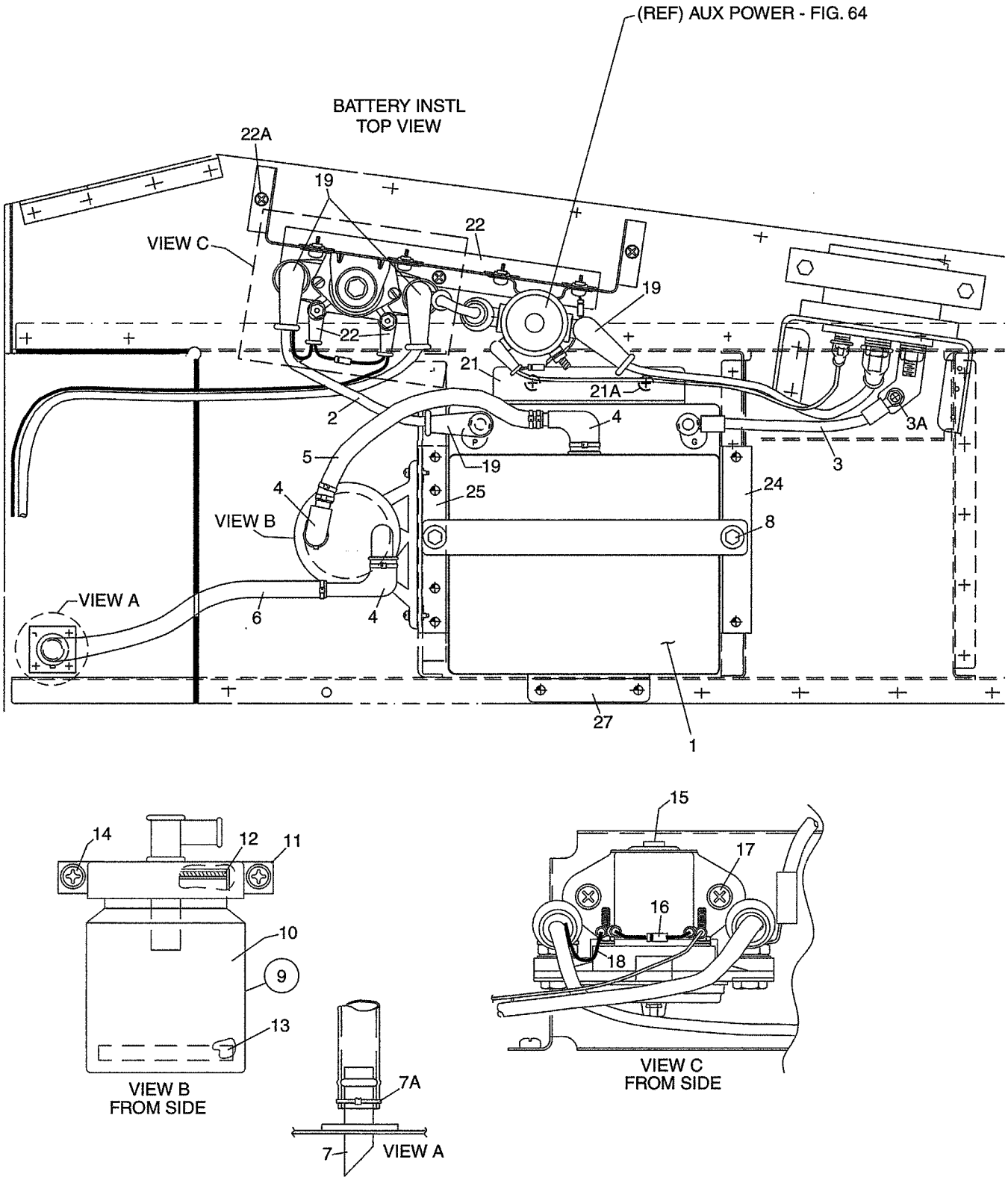


Figure 63. Battery Installation

| Figure and Index Number | Part Number | Nomenclature | No. Req. | Serial Numbers Affected |
|---|---|---|---|---|
| 63- | 85418 (D) | DRAWING - Battery Installation | | 2843001 thru 2843414 |
| | 104463 (A) | DRAWING - Battery Installation | | 2843415 and up |
| 1 | 450-101 | BATTERY - (G-243) | 1 | |
| 2 | 78140-039 | WIRE ASSY - Positive | 1 | 2843001 thru 2843414 |
| 2 | 63862-002 | WIRE ASSY - Positive | 1 | 2843415 and up |
| 3 | 85418-004 | WIRE ASSY - Ground | 1 | 2843001 thru 2843414 |
| 3 | 79653-245 | WIRE ASSY - Ground | 1 | 2843415 and up |
| 3A | 400-002 | BOLT - (AN4-4A) | 1 | |
| 4 | 559-031 | ELBOW - (TBC 3621) | 3 | |
| 5 | 101000-003 | TUBE | 1 | 2843415 and up |
| 5 | 84431-003 | TUBE | 1 | 2843001 thru 2843414 |
| -5A | 65653-019 | TUBE - (Inside 101000-003) | 1 | 2843415 and up |
| 6 | 85418-003 | TUBE | 1 | |
| 7 | 85412-002 | VENT TUBE | 1 | |
| 7A | 488-722 | TIE CABLE - (MS3367-4-9) | 1 | |
| 8 | 400-496 | BOLT - (AN3-73A) | 2 | |
| -8A | 407-800 | WASHER - (AN970-3) | 2 | |
| -8B | 84316-002 | INSULATOR | 2 | |
| 9 | 468-029 | SUMP JAR KIT - (3600-39) | 1 | |
| 10 | 487-768 | . SUMP JAR - (3675) | 1 | |
| 11 | 557-370 | . COVER ASSY - (3676) | 1 | |
| 12 | 686-046 | . SEAL - (3607) | 1 | |
| 13 | 680-145 | . FELT PAD - (3679) | 1 | |
| 14 | 411-533 | SCREW - (MS35207-264) | 2 | |
| -14A | 690-612 | WASHER - (NAS1149F0363P) | 2 | |
| 15 | 455-211 | CONTACTOR - (6041H202A) | 1 | |
| 16 | 89803-006 | DIODE ASSY | 1 | |
| 17 | 411-532 | SCREW - (MS35207-263) | 2 | |
| -17A | 690-612 | WASHER - (NAS1149F0363P) | 2 | |
| 18 | 89803-005 | WIRE ASSY | 1 | |
| 19 | 66580-002 | NIPPLE - (476-695) | 3 | |
| 20 | 23969-003 | NIPPLE - (476-681) | 2 | |
| 21 | 89344-006 | ANGLE | 1 | |
| 21A | 415-533 | SCREW - (MS35206-245) | 2 | |
| -21B | 690-616 | WASHER - (NAS1149FN832P) | 2 | |
| 22 | 104461-002 | BRACKET ASSY | 1 | 2843415 and up |
| 22A | 411-532 | SCREW - (MS35207-263) | 3 | 2843415 and up |
| -23 | 189-625 | GROMMET | A/R | |
| 24 | 85413-002 | BRACKET ASSY | 1 | |
| 25 | 85415-002 | BRACKET ASSY | 1 | |
| 26 | 85414-002 | ANGLE | 1 | |

-ITEM NOT ILLUSTRATED

When ordering, always specify Part Number, Description, and Serial Number of Aircraft

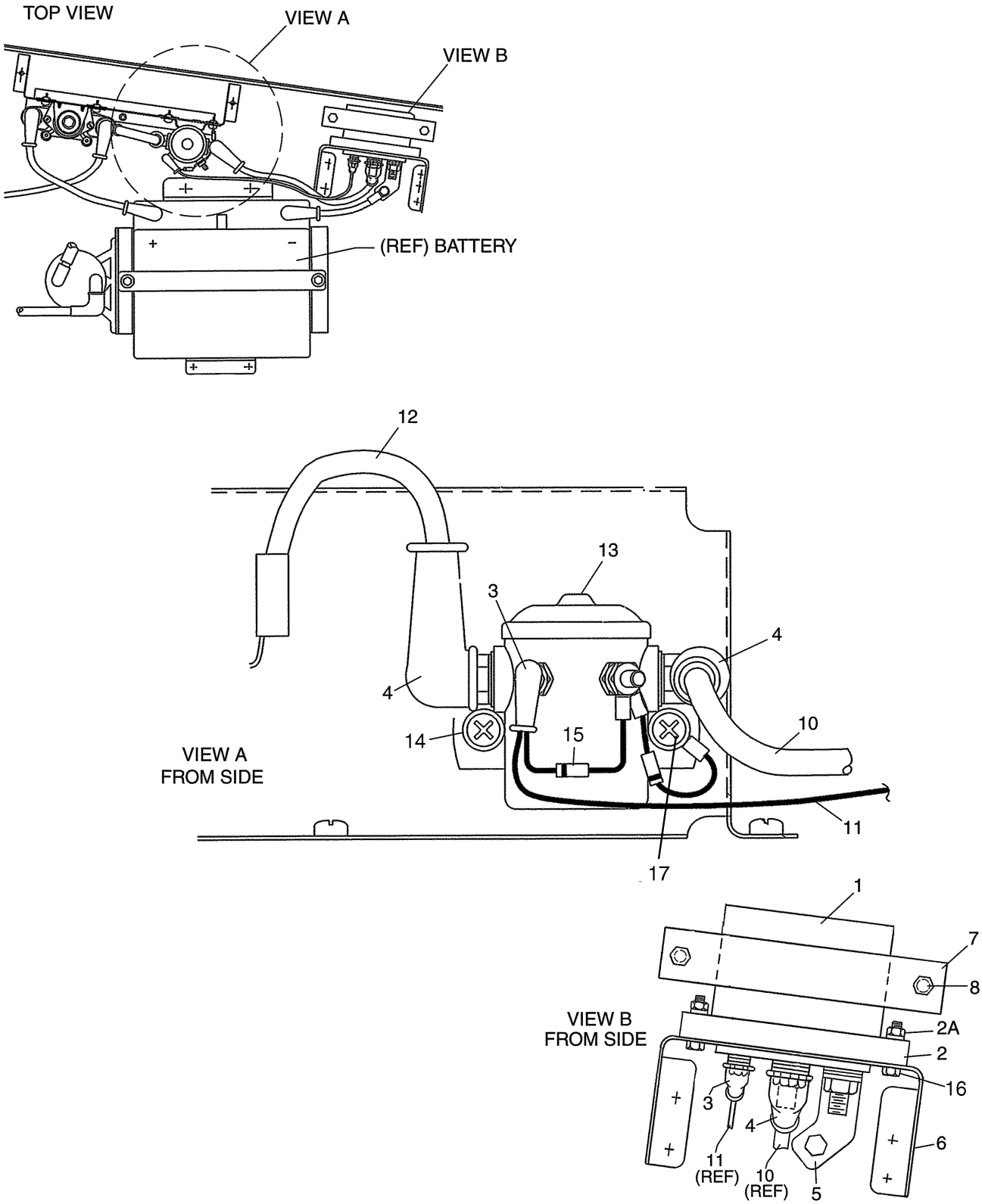


Figure 64. Auxiliary Power Receptacle Installation

| Figure and Index Number | Part Number | Nomenclature | No. Req. | Serial Numbers Affected |
|---|---|---|---|---|
| 64 | 85419 (K) | DRAWING - Auxiliary Power Receptacle Installation | | 2843001 thru 2843414 |
| | 104462 (D) | DRAWING - Auxiliary Power Receptacle Installation | | 2843415 and up |
| 1 | 42513-004 | DOOR ASSY - Auxiliary power receptacle | 1 | |
| -1A | 69669-205 | DECAL - (683-315) | 1 | |
| -1B | 100700-012 | DECAL - (656-245) (Optional) | 1 | 2843001 thru 2843414 |
| 2 | 44259-001 | RECEPTACLE | 1 | |
| 2A | 400-441 | BOLT - (AN3-7A) | 4 | |
| -2B | 690-612 | WASHER - (NAS1149F0363P) | 4 | |
| -2C | 404-526 | NUT - (MS21042-3) | 4 | |
| 3 | 476-673 | BOOT - (MS25171-1S) | 2 | |
| 4 | 476-676 | BOOT - (MS25171-4S) | 3 | |
| 5 | 73508-002 | STRAP | 1 | |
| 6 | 73290-002 | BRACKET | 1 | |
| 7 | 74075-002 | BLOCK | 1 | |
| -7A | 74075-003 | BLOCK | 1 | |
| 8 | 401-429 | BOLT - (AN4-44) | 2 | |
| -8A | 690-611 | WASHER - (NAS1149F0463P) | 2 | |
| 10 | 85419-003 | WIRE ASSY | 1 | 2843001 thru 2843414 |
| 10 | 104462-003 | WIRE ASSY | 1 | 2843415 and up |
| 11 | 85419-004 | WIRE ASSY | 1 | 2843001 thru 2843414 |
| 11 | 104462-004 | WIRE ASSY | 1 | 2843415 and up |
| 12 | 85419-005 | WIRE ASSY | 1 | 2843001 thru 2843414 |
| 12 | 104462-005 | WIRE ASSY | 1 | 2843415 and up |
| 13 | 26898-009 | RELAY - (584-422) | 1 | 2843415 and up |
| 13 | 26898-005 | RELAY - (487-167) | 1 | 2843001 thru 2843414 |
| 14 | 400-438 | BOLT - (AN3-4A) | 2 | 2843001 thru 2843414 |
| 14 | 411-533 | SCREW - (MS35207-264) | 1 | 2843415 and up |
| -14A | 690-612 | WASHER - (NAS1149F0363P) | 1 | |
| 15 | 67487-004 | DIODE ASSY | 2 | |
| 16 | 401-390 | BOLT - (AN6-6A) | 1 | |
| -16A | 690-629 | WASHER - (NAS1149F0663P) | 1 | |
| 17 | 411-534 | SCREW - (MS35207-265) | 1 | 2843415 and up |
| -17A | 690-612 | WASHER - (NAS1149FO363P) | 2 | 2843415 and up |
| | | ((1) on top of terminal and (1) under terminal) | | |

-ITEM NOT ILLUSTRATED

When ordering, always specify Part Number, Description, and Serial Number of Aircraft

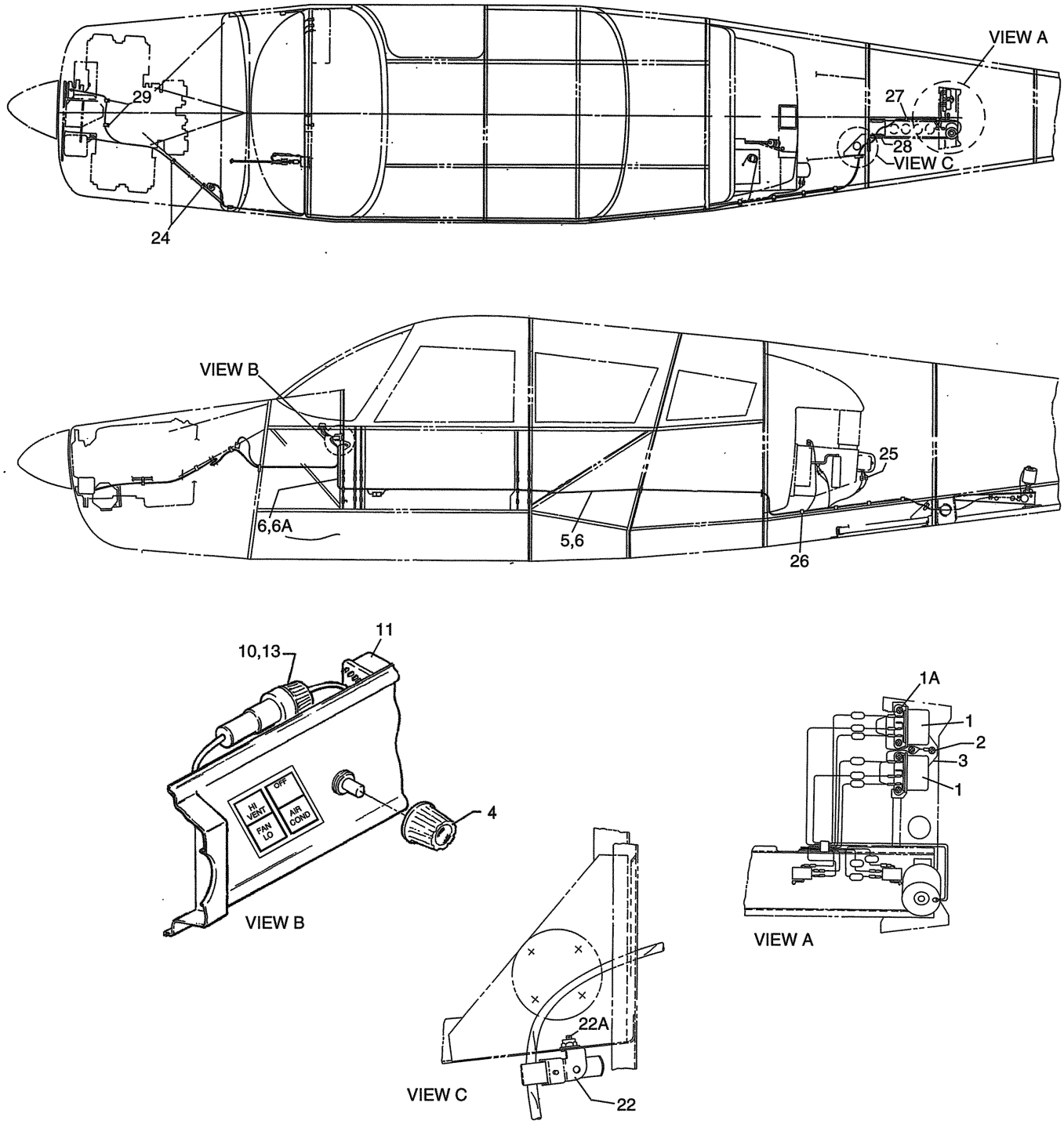


Figure 65. Air Conditioning Electrical Installation

| Figure and Index Number | Part Number | Nomenclature | No. Req. | Serial Numbers Affected |
|---|---|---|---|---|
| 65 | 99575 (AC) | DRAWING - Airconditioning Installation | | |
| | 99979 (AS) | DRAWING - Airconditioning Electrical Installation | | |
| 1 | 584-425 | RELAY - (AZ973-1C-24DC1E) (SEE NOTE 1) | 2 | |
| 1A | 415-533 | SCREW - (MS35206-243) | 5 | |
| -1B | 690-618 | WASHER - (NAS1149FN816P) | 5 | |
| 2 | 415-544 | SCREW - (MS35206-244) | 2 | |
| -2A | 690-624 | WASHER - (NAS11490BN832H) | 3 | |
| 3 | 99862-000 | MOUNT ASSY - Relay | 1 | |
| 4 | 571-162 | KNOB - Control head | 1 | |
| -4A | 99717-000 | THERMOSTAT - Air conditioning (488-585) | 1 | |
| 5 | 101284-002 | HARNESS ASSY - (Aft) | 1 | 2843203 and up |
| 6 | 85432-002 | HARNESS ASSY - (Complete) | 1 | 2843001 thru 2843202 |
| 6A | 101284-003 | HARNESS ASSY - (Fwd) | 1 | 2843203 and up |
| -8 | 487-925 | * SWITCH - Throttle limit (V3-1) | 1 | |
| -9 | 67196-007 | * BRACKET ASSY - Throttle limit switch support | 1 | |
| 10 | 465-258 | * FUSE HOLDER - (15502OU) | 2 | 2843203 and up |
| -10A | 461-629 | * FUSE - (311005) | 2 | 2843203 and up |
| 11 | 686-820 | * RELAY | 1 | |
| -12 | 85424-002 | * HARNESS ASSY | RF | 2843001 thru 2843202 |
| 13 | 465-258 | * * FUSE HOLDER - (15502OU) | 2 | 2843001 thru 2843202 |
| -13A | 461-629 | * * FUSE - (311005) | 2 | 2843001 thru 2843202 |
| 22 | 487-608 | CLAMP | 1 | |
| 22A | 411-531 | SCREW - (MS35207-262) | 1 | |
| -22B | 690-612 | WASHER - (NAS1149F0363P) | 1 | |
| -22C | 404-526 | NUT - (MS21042-3) | 1 | |
| 23 | 415-535 | SCREW - (MS35206-245) | 1 | |
| -23A | 690-624 | WASHER - (NAS1149BN832H) (Under term) | 1 | |
| -23B | 690-616 | WASHER - (NAS1149FN832P) | 1 | |
| -23C | 404-529 | NUT - (MS21042-08) | 9 | |
| 24 | 454-872 | CLAMP | 2 | |
| 25 | 484-280 | RECEPTACLE - (03-09-1022) | 1 | |
| -25A | 581-433 | PLUG - (03-09-2022) | 1 | |
| 26 | 487-722 | CLAMP - (Use when strobe light installed) | 4 | |
| -26A | 415-535 | SCREW - (MS35206-245) | 4 | |
| -26B | 690-616 | WASHER - (NAS1149FN832P) | 4 | |
| -26C | 404-526 | NUT - (MS21042-3) | 4 | |
| 27 | 554-955 | CLAMP | 2 | |
| -27A | 415-535 | SCREW - (MS35206-245) | 2 | |
| -27B | 690-618 | WASHER - (NAS1149FN816P) | 2 | |
| -27C | 404-529 | NUT - (MS21042-08) | 2 | |
| 28 | 63976-050 | GROMMET | 1 | |
| 29 | 454-813 | CLAMP | 2 | |

NOTES:

1. ALTERNATE PART NUMBER 584-430 (VF4A-45H11).

-ITEM NOT ILLUSTRATED

When ordering, always specify Part Number, Description, and Serial Number of Aircraft

**GRIDS 2C16 THRU 2C24**
**INTENTIONALLY BLANK**

# SECTION XII
# ELECTRONICS GROUP

Reissued: December 10, 2006



Island Enterprises

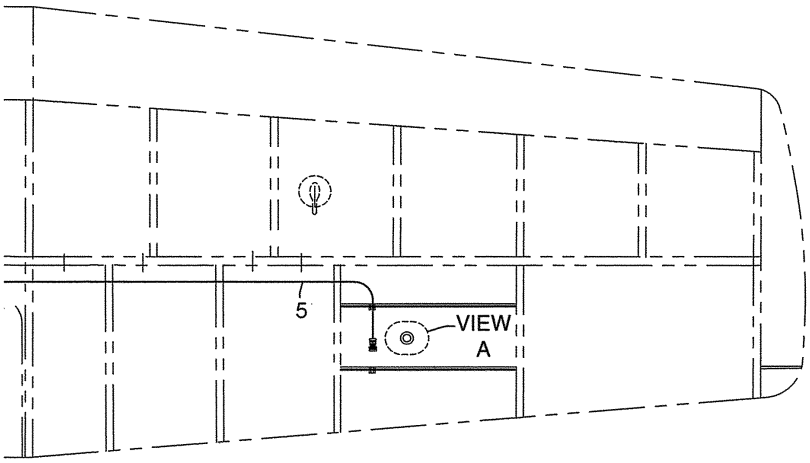


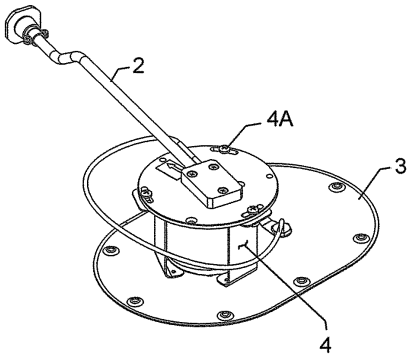


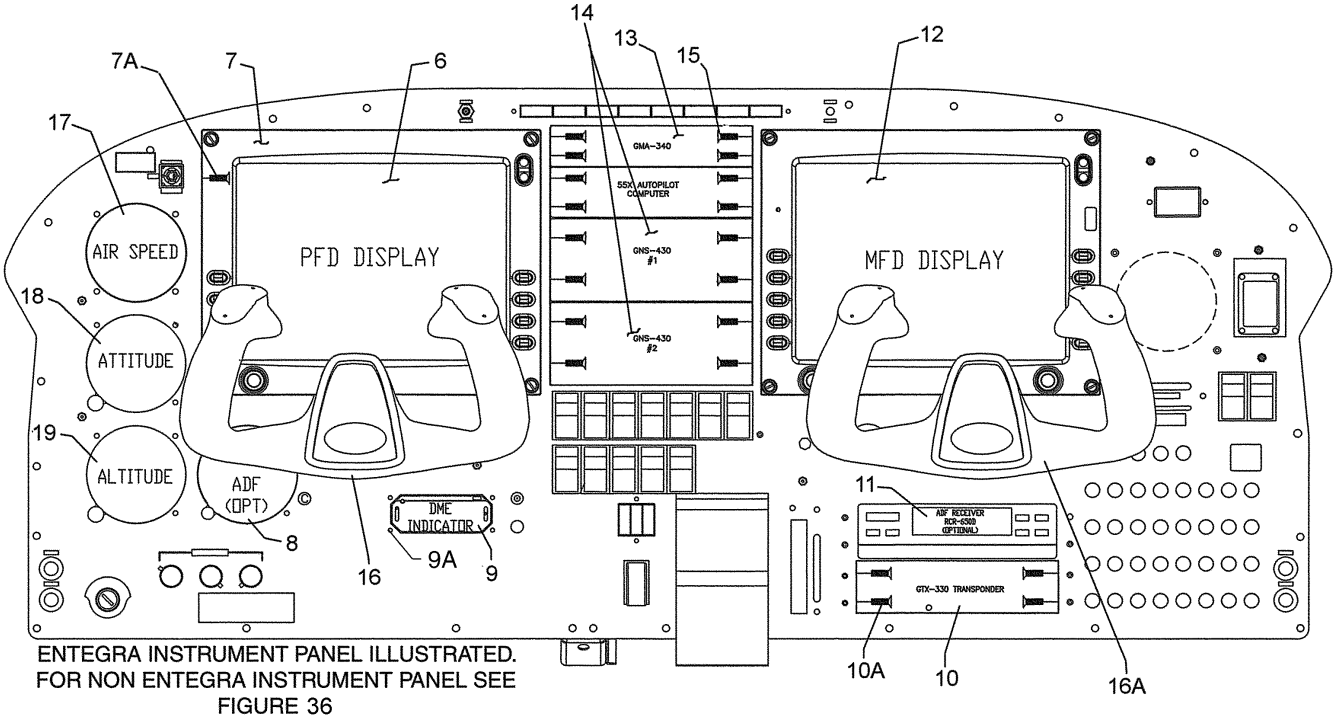


ENTEGRA INSTRUMENT PANEL ILLUSTRATED.
FOR NON ENTEGRA INSTRUMENT PANEL SEE
FIGURE 36

Figure 66. Magnetometer & Misc. Entegra Avionics Equipment

| Figure and Index Number | Part Number | Nomenclature | No. Req. | Serial Numbers Affected |
|---|---|---|---|---|
| 66- | 101901 (P) | DRAWING - Entegra Avionics System Installation | | 2843598 and up |
| | 101950 (E) | DRAWING - Entegra Instrument Panel Assy | | 2843598 and up |
| | 104481 (L) | DRAWING - Equipment List - Avionics | | 2843415 and up |
| -1 | 101802-004 | COVER ASSY - Magnetometer | 1 | |
| 2 | 652-534 | . MAGNETOMETER - (700-00011-000) | 1 | |
| 3 | 101802-005 | . COVER - Magnetometer | 1 | |
| 4 | 101806-002 | . BRACKET | 3 | |
| 4A | 415-385 | . SCREW - (MS51957-29) | 3 | |
| -4B | 690-649 | . WASHER - (NAS1149CN616R) | 3 | |
| -4C | 404-971 | . NUT - (MS21046-C06) | 3 | |
| 5 | 101753-003 | HARNESS ASSY - MAG/OAT | 1 | |
| 6 | 652-377 | PFD DISPLAY - (700-00006-002) | 1 | |
| | | (Part of Kit 652-503 - 850-00014-007) | | |
| -6A | 101782-004 | ANGLE - PFD right | 1 | |
| 7 | 101952-002 | BRACKET - PDF Support | 1 | |
| 7A | 414-732 | SCREW - (MS24693-S25) | 8 | |
| -7B | 406-428 | NUT - (C8095-632-3B) | 8 | |
| 8 | 602-239 | INDICATOR - GI-106A with Glidescope (optional equipment) | 1 | |
| 8 | 652-167 | KIT - ADF-650D System (14V) (optional equipment) | 1 | |
| 9 | 601-245 | RADIO - KN-63 DME (Optional) | 1 | 2843616 and up |
| 9 | 601-212 | RADIO - DME 451/450 (optional) | 1 | |
| 9A | 520-003 | SCREW - (MS51957-17) | 4 | |
| 9A | 486-156 | SCREW - (used on KN-63 DME Radio) | 4 | 2843616 and up |
| 10 | 652-370 | KIT - Transponder, Garmin GTX-330 | 1 | |
| 10A | 414-741 | SCREW - (MS24693-S25) | 4 | |
| -10B | 406-428 | NUT - (C8095-632-3B) | 4 | |
| -10C | 101984-002 | BRACKET ASSY - Transponder support | 1 | |
| 11 | 652-167 | KIT - ADF-650D System (14V) (optional equipment) | 1 | |
| 11 | 652-168 | RADIO - ADF-650D | 1 | |
| -11A | 101969-002 | BRACKET - ADF Receiver | AR | |
| | | (Use qty 2 without ADF option, use qty 3 with ADF option) | | |
| -11B | 101985-003 | CHANNEL - ADF support (Use only with ADF option) | 1 | |
| 12 | 652-378 | MFD DISPLAY - EMAX | 1 | |
| | | (Part of 652-522 kit - EMAX) | | |
| 12 | 652-520 | MFD DISPLAY - Without EMAX | 1 | |
| | | (Part of 652-521 kit - EMAX) | | |
| -12A | 101974-002 | U-CHANNEL - PFD support | 1 | |
| -12B | 101970-002 | ANGLE - Support | 1 | |
| 13 | 601-210 | AUDIO PANEL | 1 | |
| | | (Refer to Piper Service Bulletin #1135 - latest revision) | | |
| 14 | 601-229 | RADIO - GPS/NAV/COM #1, #2 | AR | |
| | | (Refer to Piper Service Bulletin #1036 - latest revision) | | |
| 15 | 414-741 | SCREW - (MS24693-S25) | 16 | |
| -15A | 406-428 | NUT - (C8095-632-3B) | 16 | |
| 16 | 101117-016 | CONTROL WHEEL ASSY - Pilot side | 1 | |
| 16A | 101117-006 | CONTROL WHEEL ASSY - Copilot side | 1 | |
| 17 | 548-161 | INDICATOR - Airspeed, true speed | RF | |
| | | (See Figure 37 for Instruments Installation) | | |
| 18 | 602-319 | INDICATOR - Attitude | RF | |
| | | (See Figure 37 for Instruments Installation) | | |
| 19 | 599-549 | INDICATOR - Altimeter | RF | |
| | | (See Figure 37 for Instruments Installation) | | |
| -20 | 601-244 | XM DATA RECEIVER - (XMD076-01) | 1 | |
| -20A | 415-544 | SCREW - (MS35206-244) | 4 | |

-ITEM NOT ILLUSTRATED

When ordering, always specify Part Number, Description, and Serial Number of Aircraft

| Figure and Index Number | Part Number | Nomenclature | No. Req. | Serial Numbers Affected |
|---|---|---|---|---|
| 66- | | | | |
| -21 | 101821-002 | BRACKET ASSY - XM Receiver | 1 | |
| -22 | 101900-002 | HARNESS ASSY - PFD/MFD wiring | 1 | |

-ITEM NOT ILLUSTRATED

When ordering, always specify Part Number, Description, and Serial Number of Aircraft

THIS PAGE INTENTIONALLY LEFT BLANK

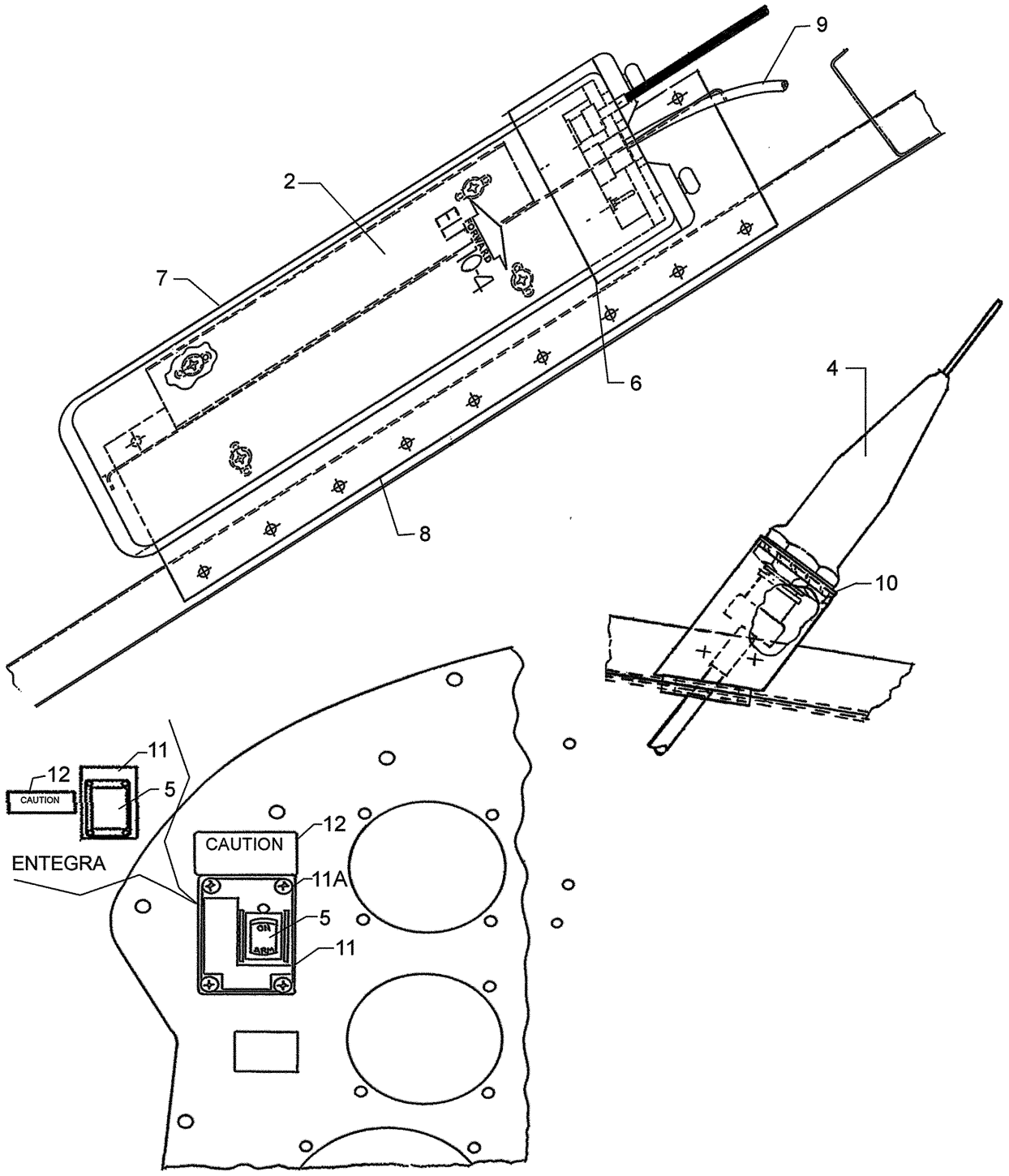


Figure 68. Emergency Locator Transmitter (ELT 110-4) Installation

| Figure and Index Number | Part Number | Nomenclature | No. Req. | Serial Numbers Affected |
|---|---|---|---|---|
| 68- | 06327 (AB) | DRAWING - ELT Installation (ELT 110-4) | | |
| -1 | 651-673 | KIT - ELT 110-4 (without transmitter) (455-9003) | 1 | |
| -1 | 599-515 | KIT - ELT 110-4 (455-7007) | 1 | |
| 2 | 762-128 | . TRANSMITTER - ELT (includes mounting bracket) (453-0150) | 1 | |
| -3 | 758-696 | . BATTERY PACK - Replacement | 1 | |
| | | (Refer to Piper Service Bulletin #1020 - latest revision) | | |
| 4 | 763-063 | . ANTENNA - Whip, with inductor (110-324) | 1 | |
| 5 | 766-712 | . REMOTE SWITCH KIT | 1 | |
| 6 | 764-535 | . END CAP - Emergency Locator Transmitter | 1 | |
| 7 | 761-889 | . MOUNTING BRACKET - Emergency Locator Transmitter | 1 | |
| 8 | 99887-007 | BRACKET ASSY - Emergency Locator Transmitter | 1 | |
| 9 | 06311-014 | HARNESS ASSY - ELT (Non Entegra) | 1 | |
| 9 | 06311-017 | HARNESS ASSY - ELT (Entegra) | 1 | 2843598 and up |
| 10 | 78740-002 | DOUBLER - Antenna | 1 | |
| 11 | 85187-002 | ADAPTER PLATE | 1 | |
| 11A | 515-710 | SCREW | 4 | |
| -11B | 404-528 | NUT - (MS21042-06) | 4 | |
| 12 | 35669-105 | PLACARD - Caution (583-102) | 1 | |

-ITEM NOT ILLUSTRATED

When ordering, always specify Part Number, Description, and Serial Number of Aircraft

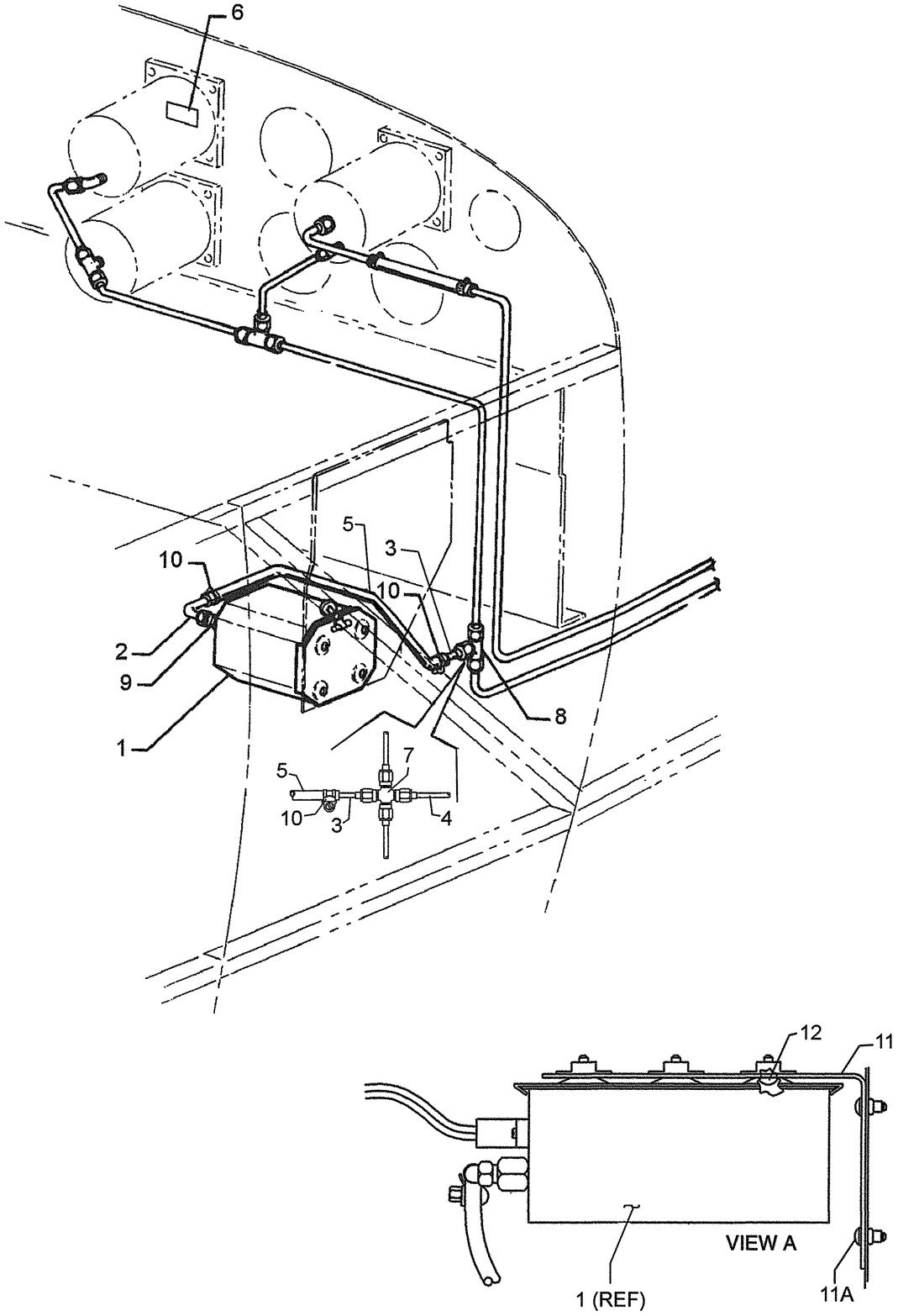


Figure 69. Encoder Installation

| Figure and Index Number | Part Number | Nomenclature | No. Req. | Serial Numbers Affected |
|---|---|---|---|---|
| 69- | 79658 (H) | DRAWING - Encoder Installation-AR 850 | | 2843001 thru 2843541 |
| | 101415 (E) | DRAWING - Encoder Installation - AK 350 | | 2843542 and up |
| 1 | 602-290 | ALTITUDE REPORTER - AK 350 | 1 | 2843542 and up |
| 1 | 599-012 | ALTITUDE REPORTER - AR 850 | 1 | 2843001 thru 2843541 |
| 2 | 79636-004 | TUBE ASSY - Encoder | 2 | 2843001 thru 2843541 |
| 2 | 67700-160 | TUBE ASSY - Encoder | 2 | 2843542 and up |
| 3 | 63211-000 | TUBE ASSY - Encoder (optional) | 1 | |
| 4 | 67700-150 | TUBE ASSY - Alternate static (Used if alternate static system is installed) | 1 | 2843001 thru 2843541 |
| 4 | 67700-172 | TUBE ASSY - Alternate static | 1 | 2843542 and up |
| 5 | 63913-037 | HOSE - Static | 1 | |
| 6 | 35669-154 | PLACARD - Altitude reporter installed | 1 | |
| 7 | 455-417 | CROSS - (AN827-3D) (SEE NOTE 1) | 1 | |
| 8 | 488-315 | TEE - (AN824-3D) | 1 | 2843001 thru 2843541 |
| 9 | 558-807 | ELBOW - (MS20822-3D) | 1 | |
| 10 | 554-575 | CLAMP | 2 | |
| 11 | 101425-002 | BRACKET | 1 | 2843542 and up |
| 11A | 415-520 | SCREW - (MS35206-230) | 4 | 2843542 and up |
| -11B | 690-640 | WASHER - (NAS1149FN632P) | 4 | 2843542 and up |
| 12 | 415-505 | SCREW - (MS35206-215) | 3 | |
| -12A | 690-668 | WASHER - (NAS1149FN432P) | 3 | |

NOTES:

1. USED IF ALTERNATE STATIC SYSTEM IS INSTALLED, REPLACES ITEM 69-8, FOR SERIAL NUMBERS 2843001 THRU 3843541. STANDARD ITEM FOR SERIAL NUMBERS 2843542 AND UP.

-ITEM NOT ILLUSTRATED

When ordering, always specify Part Number, Description, and Serial Number of Aircraft

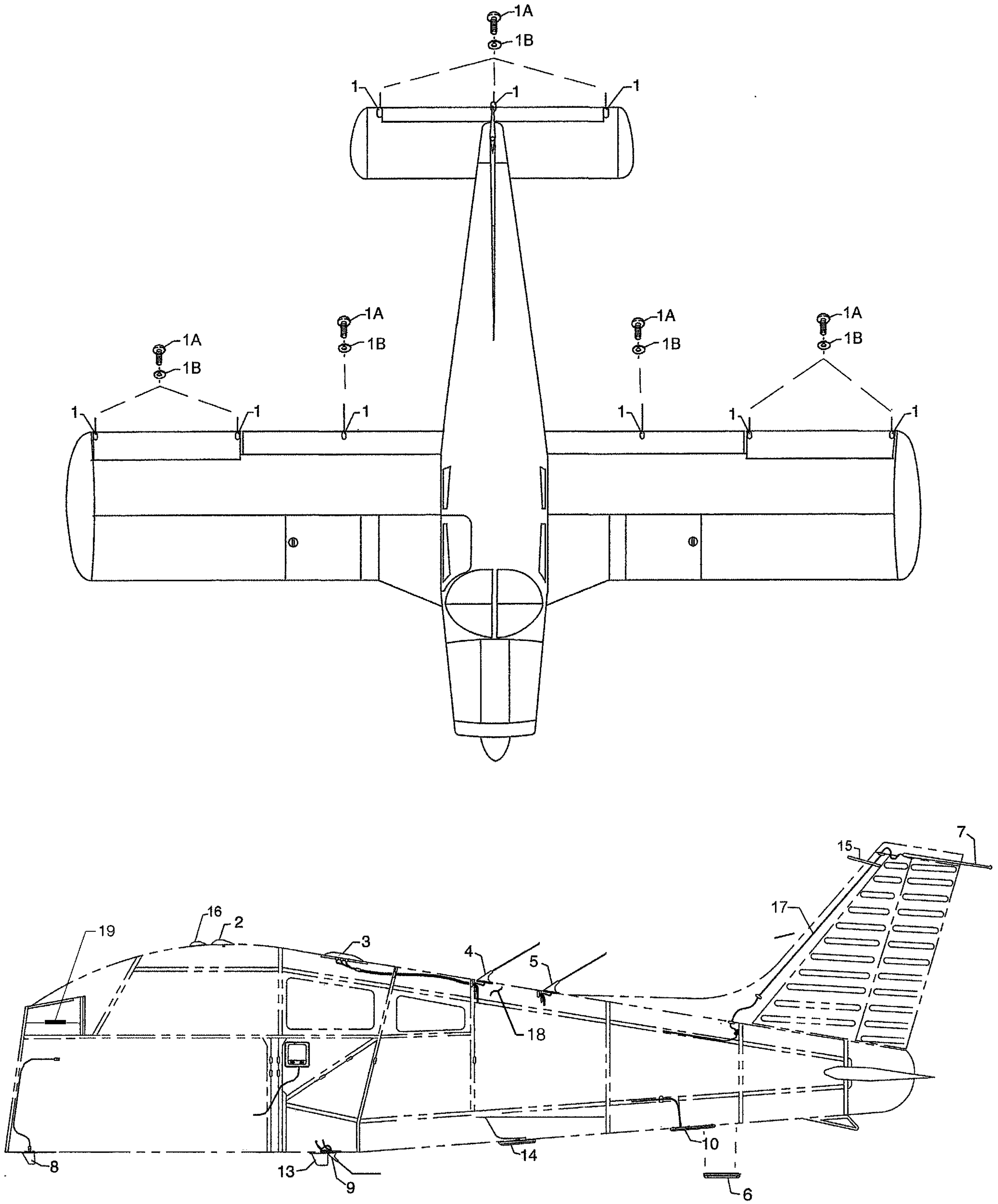


Figure 70. Radio, Antenna System and Static Wicks Installation

| Figure and Index Number | Part Number | Nomenclature | No. Req. | Serial Numbers Affected |
|---|---|---|---|---|
| 70- | 69667 (M) | DRAWING - Static Wick Installation | | |
| | 100966 (D) | DRAWING - Avionics System Installation (Without Entegra) | | 2843001 thru 2843076 |
| | 101033 (W) | DRAWING - Avionics System Installation (Without Entegra) | | 2843077 thru 2843414 |
| | 104481 (L) | DRAWING - Avionics System Installation (Without Entegra) | | 2843415 and up |
| | 101901 (P) | DRAWING - Avionics System Installation (With Entegra) | | 2843598 and up |
| 1 | 494-678 | STATIC WICK - (SW 10-96) | 9 | |
| 1A | 415-520 | SCREW - (MS35206-230) | 18 | |
| 1B | 407-041 | LOCK WASHER - (MS35338-41) | 18 | |
| 2 | 683-721 | ANTENNAS - GPS 1 & GPS 2 (010-10040-001) | AR | 2843203 and up |
| -2A | 101265-005 | COAX - #1 GPS | 1 | 2843203 and up |
| -2B | 101266-004 | COAX - #2 GPS | 1 | 2843203 and up |
| 3 | 683-726 | ANTENNA - Skywatch Directional (NY-164) | 1 | 2843415 and up |
| -3A | 104487-003 | CABLE ASSY - Antenna, blue (Entegra) | 1 | 2843415 and up |
| -3B | 104487-005 | CABLE ASSY - Antenna, black (Entegra) | 1 | 2843415 and up |
| -3C | 104487-004 | CABLE ASSY - Antenna, red (Entegra) | 1 | 2843415 and up |
| 4 | 596-664 | ANTENNA - COMM 1/2 | AR | |
| 4 | 683-735 | ANTENNA - COMM 2 / FIS (C1 248-30) (Entegra) | 1 | 2843598 and up |
| | | (Optional - used with Weather Datalink System Instl) | | |
| -4A | 99610-000 | CABLE - COMM 1 (Non Entegra) | 1 | 2843001 thru 2843202 |
| -4A | 101265-006 | CABLE - COMM 1/2 (Non Entegra) | AR | 2843203 and up |
| -4A | 101266-005 | CABLE - COMM 1 (Entegra) | 1 | 2843598 and up |
| -4A | 101771-005 | CABLE - COMM 2 (Entegra) | 1 | 2843598 and up |
| 5 | 596-664 | ANTENNA - COMM 2 | 1 | 2843001 thru 2843202 |
| -5A | 99610-002 | CABLE - COMM 2 (Non Entegra) | 1 | 2843001 thru 2843202 |
| 6 | 597-893 | ANTENNA - Marker Beacon (Entegra) | 1 | 2843598 and up |
| | | (located on aft section, bottom right side of aircraft) | | |
| -6A | 79004-003 | CABLE - Marker beacon (Entegra) | 1 | 2843598 and up |
| 7 | 451-802 | ANTENNA - Navigation | 1 | |
| 8 | 683-724 | ANTENNA - Transponder GTX 320/327/330 | 1 | 2843203 and up |
| 8 | —- —- | ANTENNA - Transponder KT-76A (Non Entegra) | 1 | 2843001 thru 2843202 |
| | | (Antenna #KA60 is part of Transponder kit 601-102) | | |
| -8A | 102328-007 | PLATE - Antenna backing | | 2843203 and up |
| 9 | 683-725 | ANTENNA - COMM 1, VHF bent whip (CI 122) | 1 | 2843203 and up |
| -9A | 101266-005 | CABLE | 1 | 2843203 and up |
| 10 | 683-728 | ANTENNA - Stormscope (NY-163) (Entegra) | 1 | 2843598 and up |
| 10 | 597-893 | ANTENNA - Marker Beacon (Non Entegra) | 1 | |
| -10A | 79004-003 | CABLE - Marker beacon (Non Entegra) | 1 | |
| 14 | 598-186 | ANTENNA - ADF KR-87 (Non Entegra) | 1 | 2843001 thru 2843076 |
| 14 | 598-184 | ANTENNA - ADF 650A/D (Entegra) | 1 | 2843598 and up |
| 14 | —- - —- | ANTENNA - ADF-650D (Antenna #690124 is part of | RF | 2843203 and up |
| | | ADF-650D kit 652-168) (Non Enetgra) | | |
| 14 | 598-184 | ANTENNA - ADF KR-87 (071-1234-01)(Non Entegra) | 1 | 2843077 thru 2843202 |
| 14 | —- - —- | ANTENNA - ADF-650A (Antenna #690124 is part of | RF | 2843203 and up |
| | | ADF-650A kit 601-213) (Non Entegra) | | |
| 15 | 451-802 | ANTENNA - Omni receiving (Non Entegra) | 1 | 2843001 thru 2843076 |
| 16 | 683-736 | ANTENNA - XM (CI 420-1) (Entegra) | 1 | 2843598 and up |
| -16A | 101771-021 | COAX ASSY - XM antenna (Entegra) | 1 | 2843598 and up |
| -16B | 434-191 | GROMMET - XM coax (MS35489-4S) (Entegra) | 3 | 2843598 and up |
| 17 | 65192-009 | COAX | 1 | |
| 18 | 692-306 | MOUNT (ABM2S-S6D) | 1 | 2843598 and up |
| 19 | 601-203 | RECEIVER KIT - KR-87 | 1 | 2843616 and up |
| | | (Receiver is part of this kit) | | |

-ITEM NOT ILLUSTRATED

When ordering, always specify Part Number, Description, and Serial Number of Aircraft

Revised: March 10, 2007

THIS PAGE INTENTIONALLY LEFT BLANK

THIS PAGE INTENTIONALLY LEFT BLANK

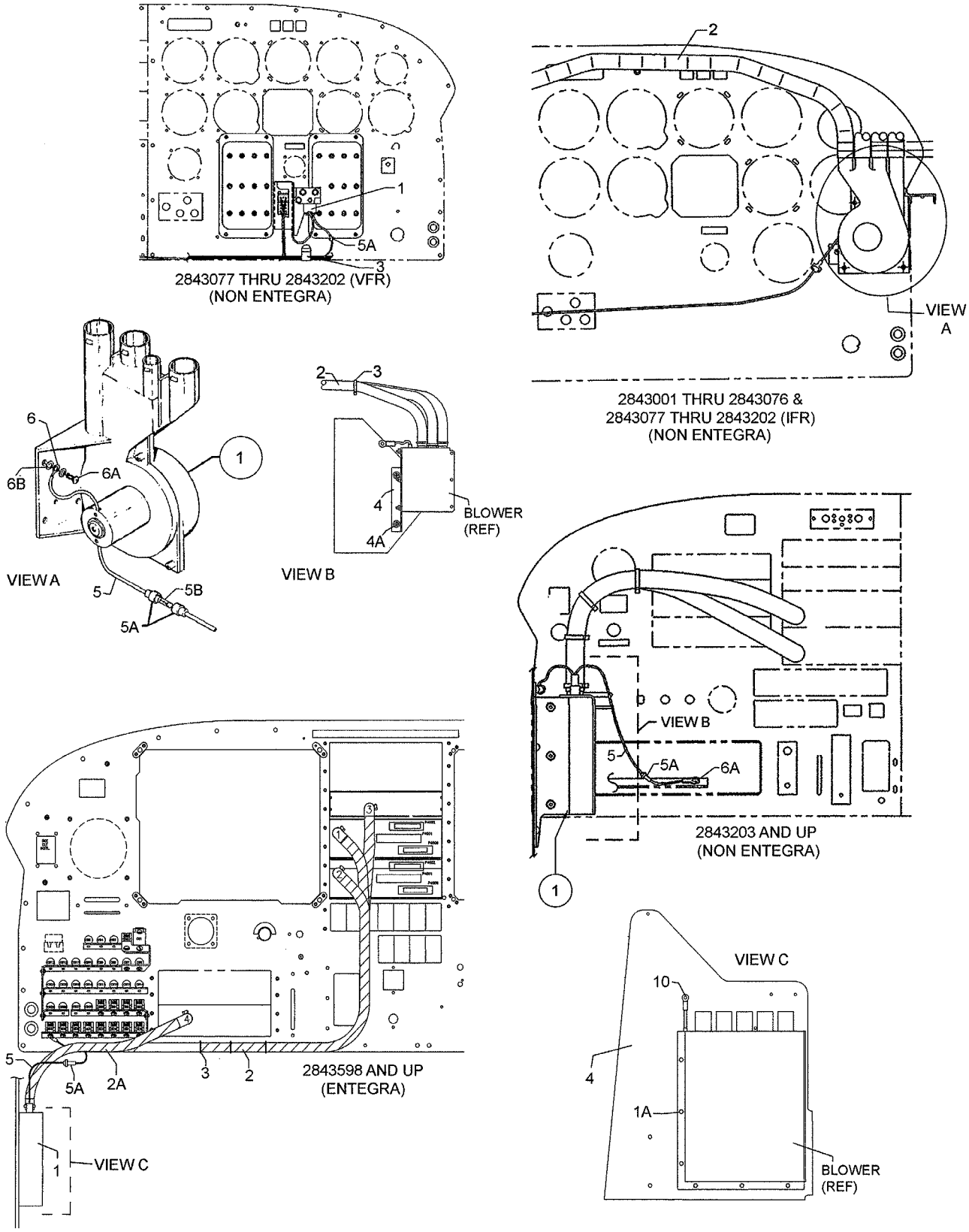


Figure 71. Avionics Cooling Installation

| Figure and Index Number | Part Number | Nomenclature | No. Req. | Serial Numbers Affected |
|---|---|---|---|---|
| 71- | 39857 (T) | DRAWING - Avionics Cooling Installation | | 2843001 thru 2843076 |
| | 101145 (D) | DRAWING - Avionics Cooling Installation | | 2842077 thru 2843202 |
| | 101318 (K) | DRAWING - Avionics Cooling Installation | | 2843203 and up |
| | 101901 (P) | DRAWING - Avionics System Installation (With Entegra) | | 2843598 and up |
| 1 | 460-110 | BLOWER - Avionics cooling, Non IFR (3 port) | 1 | 2843203 and up |
| 1 | 460-112 | BLOWER - Avionics cooling, IFR (5 port) | 1 | 2843415 and up |
| 1 | 101983-002 | BLOWER - Avionics cooling, Entegra | 1 | 2843598 and up |
| 1 | 460-105 | BLOWER - Avionics cooling (19A2790) | 1 | 2843001 thru 2843202 |
| 1A | 415-376 | SCREW - (MS51957-27) (Entegra) | 6 | 2843598 and up |
| 2 | 63633-135 | HOSE - Avionics cooling | AR | |
| 2A | 63633-136 | HOSE - Avionics cooling (60” long) (Entegra) | 1 | 2843598 and up |
| 3 | 554-678 | CLAMP - (SAE TY-F6) (Non Entegra) | AR | 2843001 thru 2843076 |
| 3 | 488-752 | TIE CABLE - (MS3367-2-9) | AR | 2843077 and up |
| 4 | 101324-003 | BRACKET - (Non Entegra) | 1 | 2843203 and up |
| 4 | 101961-002 | BRACKET - right side of firewall (Entegra) | 1 | 2843598 and up |
| 4A | 411-533 | SCREW - (MS35207-264) (Non Entegra) | 2 | 2843203 and up |
| -4B | 690-609 | WASHER - (NAS1149F0332P) (Non Entegra) | 2 | 2843203 and up |
| 5 | 101901-114 | CABLE ASSY - (Entegra) | 1 | 2843598 and up |
| 5 | 101318-003 | CABLE ASSY - (Non Entegra) | 1 | 2843203 and up |
| 5 | 86652-008 | FUSE ASSY - Blower | 1 | 2843001 thru 2843202 |
| 5A | 461-641 | . FUSE HOLDER - (155-020) (Non Entegra) | 1 | |
| 5A | 461-660 | . FUSE HOLDER - (HWA) (Entegra) | 1 | 2843598 and up |
| 5B | 461-629 | . FUSE - (311005) (Non Entegra) | 1 | |
| 5B | 461-659 | . FUSE - (GMW-5 or FM01-5) (Entegra) | 1 | 2843598 and up |
| 6 | 488-463 | TERMINAL - (Non Entegra) | 1 | 2843001 thru 2843202 |
| 6A | 415-535 | SCREW - (MS35206-245) (Non Entegra) | 2 | 2843001 thru 2843202 |
| 6A | 415-519 | SCREW - (MS35206-229) (Non Entegra) | 2 | 2843203 and up |
| 6B | 690-619 | WASHER - (NAS1149FN816P) (Non Entegra) | 2 | 2843001 thru 2843202 |
| 6B | 690-639 | WASHER - (NAS1149FN616P) (Non Entegra) | 2 | 2843203 and up |
| -6C | 407-041 | LOCKWASHER - (MS3538-41) (Non Entegra) | 1 | 2843203 and up |
| -6D | 405-450 | NUT - (MS35649-262) (Non Entegra) | 1 | 2843203 and up |
| 10 | 415-519 | SCREW - (MS35206-234) (Entegra) | 1 | 2843598 and up |
| -10A | 690-639 | WASHER - (NAS1149FN616P) (Entegra) | 1 | 2843598 and up |

-ITEM NOT ILLUSTRATED

When ordering, always specify Part Number, Description, and Serial Number of Aircraft

THIS PAGE INTENTIONALLY LEFT BLANK

| Figure and Index Number | Part Number | Nomenclature | No. Req. | Serial Numbers Affected |
|---|---|---|---|---|
| | | AVIONICS EQUIPMENT LISTS | | |
| | 100966-004 | Standard Avionics - Bendix / King Package | | 2843001 thru 2843076 |
| | 100966-005 | Deluxe Avionics - Bendix / King Package | | 2843001 thru 2843076 |
| | 101033-004 | Standard Avionics - Bendix / King Package | | 2843077 thru 2843202 |
| | 101033-005 | Option Package #1 (590) - Bendix / King | | 2843077 thru 2843202 |
| | 101033-006 | Option Package #2 (591) - Bendix / King | | 2843077 thru 2843202 |
| | 101033-007 | Standard Avionics - Garmin Package | | 2843203 thru 2843414 |
| | 101033-008 | IFR Avionics - Garmin Package | | 2843203 thru 2843414 |
| | 104481-002 | Standard Avionics - Garmin Package | | 2843415 thru 2843585 |
| | 104481-003 | IFR Avionics - Garmin Package | | 2843415 thru 2843585 |
| | 104481-004 | Standard Avionics - Garmin Package | | 2843586 and up |
| | 104481-005 | IFR Avionics - Garmin Package | | 2843586 and up |
| | 101901-002 | Entegra Avionics System | | 2843598 and up |

-ITEM NOT ILLUSTRATED

When ordering, always specify Part Number, Description, and Serial Number of Aircraft

**GRIDS 2D18 THRU 2D24**
**INTENTIONALLY BLANK**

# SECTION XIII
# MISCELLANEOUS GROUP

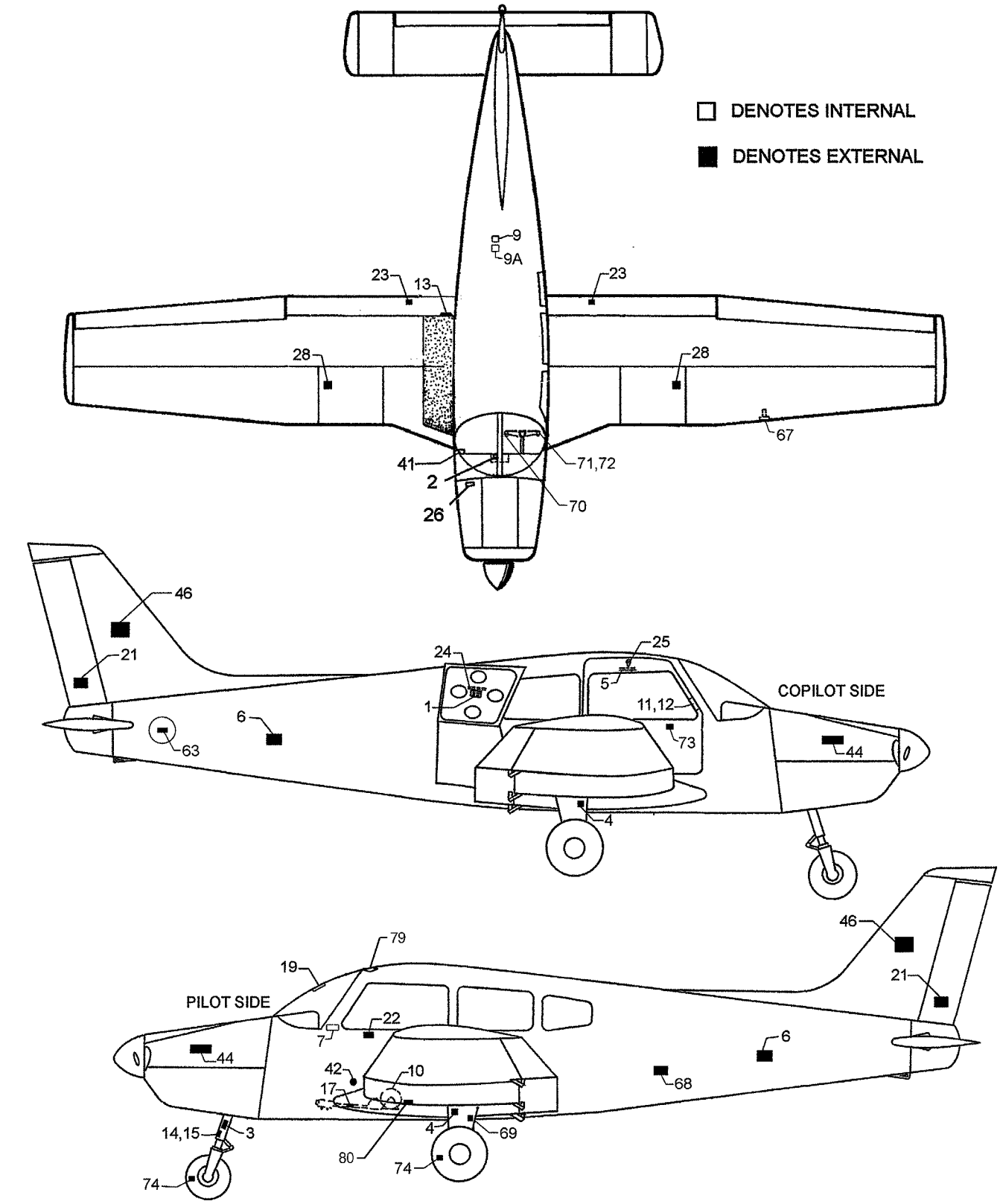


Figure 72. Placards and Exterior Stencils
(Sheet 1 of 2)

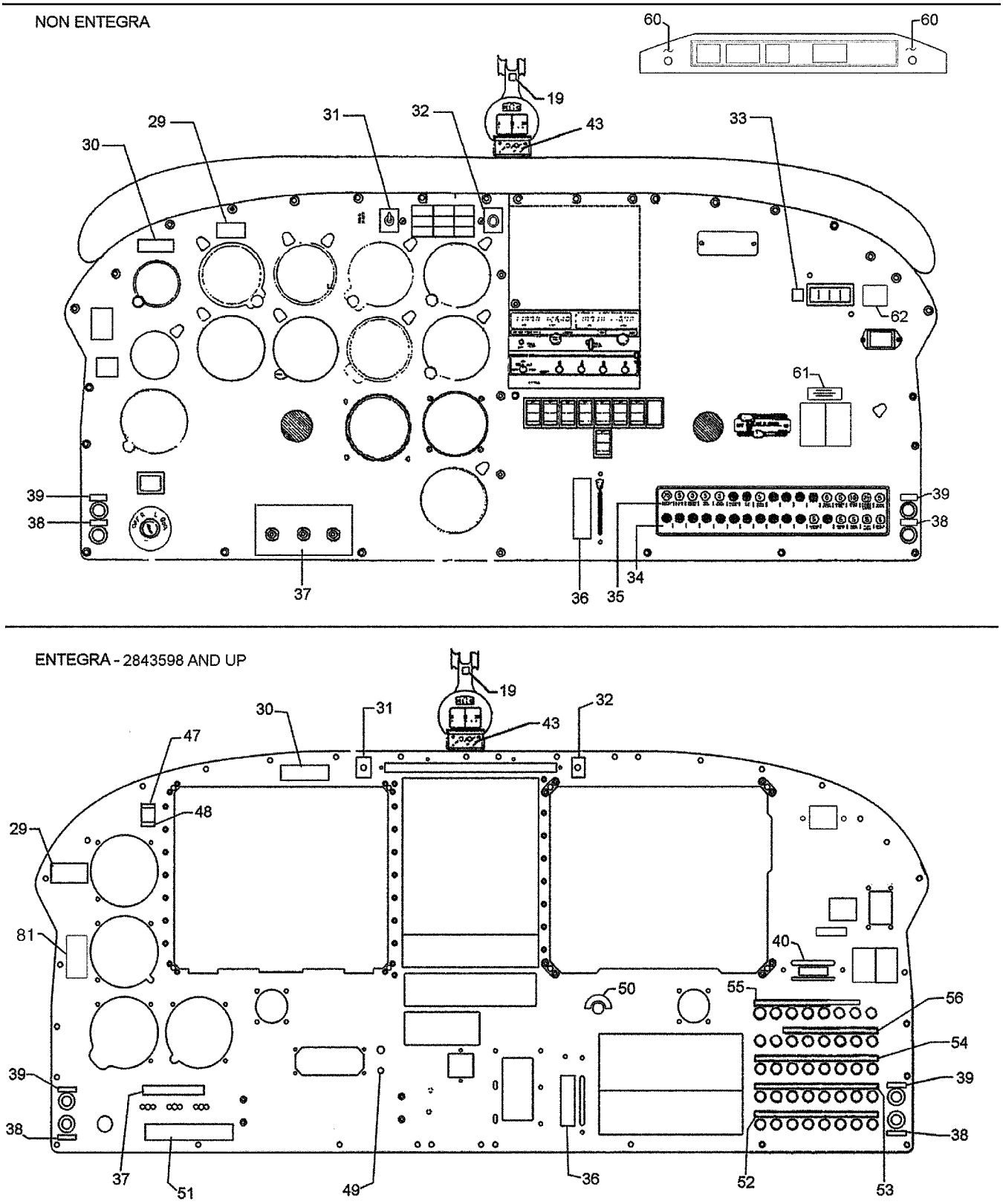


Figure 72. Placards and Exterior Stencils
(Sheet 2 of 2)

THIS PAGE INTENTIONALLY LEFT BLANK

| Figure and Index Number | Part Number | Nomenclature | No. Req. | Serial Numbers Affected |
|---|---|---|---|---|
| 72 | 36991 (CG) | DRAWING - Placard Details Installation | | |
| | 83363 (R) | DRAWING - Exterior Finish | | |
| | 67462 (P) | DRAWING - Compass Installation | | |
| 1 | 582-681 | PLACARD - Baggage compartment (69669-171) | 1 | |
| 2 | 580-999 | PLACARD - Rudder trim (65219-000) | 1 | |
| 3 | 580-881 | PLACARD - Oleo service instruction (decal) (63931-000) (Nose gear) | 1 | |
| 4 | 550-880 | PLACARD - Oleo service instruction (decal) (63933-000) (Main gear) | 2 | |
| 5 | 36500-002 | LETTERING DETAIL - Door | 1 | |
| 6 | 656-238 | PLACARD - Static vents (100700-005) | 2 | 2843415 and up |
| 6 | 656-237 | PLACARD - Static vents (100700-004) | 2 | 2843415 and up |
| 7 | 583-311 | PLACARD - Limitations/Information (35669-135) | 1 | |
| -8 | —- —- | DELETED | | |
| 9 | 581-557 | PLACARD - Cabin bulkhead (66787-000) | 1 | |
| 9A | 582-662 | PLACARD - Baggage limitation (69669-151) | 1 | |
| 10 | 581-689 | PLACARD - Stabilator trim (67786-000) | 1 | |
| 11 | 582-619 | PLACARD - Latch (69669-118) | 1 | |
| 12 | 582-618 | PLACARD - Open (69669-117) | 1 | |
| 13 | 582-789 | PLACARD - Flap warning (35664-002) | 1 | |
| 14 | 683-019 | PLACARD - Turn limit (35669-010) | 1 | 2843001 thru 2843414 |
| 14 | 683-402 | PLACARD - Turn limit (35669-228) | 1 | 2843415 and up |
| 15 | 582-783 | PLACARD - Turn limit pointer (35669-005) | 1 | |
| 17 | 583-079 | PLACARD - Flap lever (35669-027) | 1 | |
| -18 | DELETED | | | |
| 19 | 583-666 | PLACARD - Compass deviation (87369-027) | 1 | |
| -20 | DELETED | | | |
| 21 | 583-581 | PLACARD - Do not push (87341-002) | 2 | |
| 22 | 583-582 | PLACARD - Level point (87341-003) | 2 | |
| 23 | 583-583 | LETTERING DETAIL - No Step (87341-004) | 2 | |
| 24 | 583-584 | PLACARD - Max. baggage(87341-005) | 1 | |
| 25 | 583-536 | LETTERING DETAIL - Door release (87334-002) | 1 | |
| 25 | 63774-000 | LETTERING DETAIL - Door release | 1 | |
| -25A | 683-336 | PLACARD - Door latch (35669-222) | 1 | 2843415 and up |
| -25A | 683-950 | PLACARD - Door latch (35669-235) white lettering | 1 | 2843415 and up |
| -25A | 683-411 | PLACARD - Door latch (35669-233) black lettering | 1 | 2843415 and up |
| 26 | 583-542 | PLACARD - Oil Spec. (87340-002) | 1 | |
| 26 | 63557-000 | PLACARD - Oil Spec. | 1 | |
| -27 | DELETED | | | |
| 28 | 456-682 | DECAL - Avgas | 2 | |
| 29 | 656-161 | PLACARD - Airspeed and crosswind (84967-169) | 1 | |
| 30 | 19099-002 | PLATE - Aircraft registration number (Entegra) | 1 | 2843598 and up |
| 30 | 19099-000 | PLATE - Aircraft registration number (Non Entegra) | 1 | |
| 31 | 683-291 | PLACARD - Night/day (84967-130) | 1 | |
| 32 | 683-294 | PLACARD - Press to test (84967-133) | 1 | |
| 33 | 683-311 | PLACARD - Amp altr (84967-145) (Non Entegra) | 1 | 2843203 and up |
| 34 | 656-164 | PLACARD - Circuit breaker (84967-172) (Non Entegra) | 1 | 2843001 thru 2843202 |
| 34 | 656-342 | PLACARD - Circuit breaker (84967-245) (Non Entegra) | 1 | 2843203 thru 2843414 |
| 34 | 656-372 | PLACARD - Circuit breaker (84967-271) (Non Entegra) | 1 | 2843415 and up |
| 35 | 656-163 | PLACARD - Circuit breaker (84967-171) (Non Entegra) | 1 | |
| 36 | 656-160 | PLACARD - Carburetor heat (84967-168) | 1 | |
| 37 | 656-108 | PLACARD - Dimming (84967-101) | 1 | |
| 38 | 683-293 | PLACARD - Mike (84967-132) (Non Entegra) | 2 | |
| 38 | 683-965 | PLACARD - Mike (84967-298) (Entegra) | 2 | 2843598 and up |

-ITEM NOT ILLUSTRATED

When ordering, always specify Part Number, Description, and Serial Number of Aircraft

| Figure and Index Number | Part Number | Nomenclature | No. Req. | Serial Numbers Affected |
|---|---|---|---|---|
| 72- | | | | |
| 39 | 683-292 | PLACARD - Phone (84967-131) | 2 | |
| 40 | 683-302 | PLACARD - Heat/def (84967-139) | 1 | |
| 41 | 581-055 | PLACARD - Fuel checker (62923-000) | 1 | |
| 42 | 581-688 | PLACARD - Fuel (99184-005) | 1 | |
| -42A | 581-891 | PLACARD - Right tank (99184-008) | 1 | |
| -42B | 581-890 | PLACARD - Left tank (99184-007) | 1 | |
| -42C | 581-685 | PLACARD - Fuel off (99184-002) | 1 | |
| 43 | 554-382 | CARD - Compass deviation (66752-000) | 1 | |
| 44 | 687-687 | STENCIL - Archer III (85438-002) | 2 | |
| -45 | DELETED | | | |
| 46 | 687-688 | STENCIL - Piper logo (100814-002) | 2 | 2843001 thru 2843495 |
| 46 | 683-937 | DECAL - Piper logo (104676-003) | 2 | 2843496 and up |
| 47 | 656-258 | PLACARD - Electric trim (84967-215) (Entegra) | 1 | 2843598 and up |
| 48 | 656-259 | PLACARD - Electric trim ON/OFF (84967-216) (Entegra) | 1 | 2843598 and up |
| 49 | 656-341 | PLACARD - DME select (84967-244) (optional) (Entegra) | 1 | 2843598 and up |
| 50 | 656-177 | PLACARD - Carburetor ice detector (84967-185)(Entegra) | 1 | 2843598 and up |
| 51 | 683-297 | PLACARD - Alternate static (84967-136) (Entegra) | 1 | 2843598 and up |
| 52 | 683-981 | DECAL - Circuit breaker (100835-025) (Entegra) | 1 | 2843598 and up |
| 53 | 683-980 | DECAL - Circuit breaker (100835-024) (Entegra) | 1 | 2843598 and up |
| 54 | 683-982 | DECAL - Circuit breaker (100835-026) (Entegra) | 1 | 2843598 and up |
| 55 | 684-726 | DECAL - Circuit breaker (100835-036) (Entegra withstandby alternator) | 1 | 2843622 and up |
| 55 | 683-977 | DECAL - Circuit breaker (100835-021) (Entegra) | 1 | 2843598 and up |
| 56 | 683-976 | DECAL - Circuit breaker (100835-020) (Entegra) | 1 | 2843598 and up |
| -57 | DELETED | | | |
| -58 | DELETED | | | |
| -59 | DELETED | | | |
| 60 | 656-348 | DECAL - Dome light (100700-033) | 2 | |
| 61 | 683-301 | PLACARD - Climate control center (84967-138) | 1 | |
| 62 | 765-553 | PLACARD - Caution: Reduce amp load (Used if auxiliary vacuum pump is installed) | 1 | |
| 63 | 583-102 | PLACARD - ELT location (35669-105) | RF | |
| -64 | 583-112 | PLACARD - Strobe light outlets (35669-107) | 1 | |
| 65 | 582-614 | PLACARD - Pitot drain (69669-115) | RF | |
| 66 | 683-316 | PLACARD - Cabin air pull - closed (69669-206) | 1 | |
| 67 | 450-741 | DECAL - Lift detector (C52207-3) | RF | |
| 68 | 683-315 | PLACARD - External power (69669-205) | RF | |
| 69 | 582-875 | PLACARD - Gear (35669-023) | RF | |
| 70 | 66751-000 | PLACARD - Electric trim (control wheel) | RF | |
| 71 | 582-872 | PLACARD - A/P INTR. (35669-016) | RF | |
| 72 | 582-873 | PLACARD - Mike (35669-017) | RF | |
| 73 | 68555-005 | PLACARD - Door lock | RF | |
| 74 | 582-875 | PLACARD - Tire pressure, main (35669-023) | 2 | |
| -75 | 581-053 | PLACARD - Trim indicator (62919-000) | RF | |
| -76 | 581-054 | PLACARD - Trim (62920-000) | RF | |
| -77 | 99121-000 | PLACARD ASSY - Alternate static correlation | RF | |
| -78 | 582-155 | PLACARD - Dome light maximum (69669-020) | 1 | |
| 79 | 656-322 | PLACARD - No Smoking (84967-225) | 1 | |
| 80 | 581-391 | PLACARD - Emergency Down | 1 | |
| 81 | 684-744 | DECAL - Attitude Indicator (84697-338) (Entegra) | 1 | |

-ITEM NOT ILLUSTRATED

When ordering, always specify Part Number, Description, and Serial Number of Aircraft

THIS PAGE INTENTIONALLY LEFT BLANK

THIS PAGE INTENTIONALLY LEFT BLANK

| Figure and Index Number | Part Number | Nomenclature | No. Req. | Serial Numbers Affected |
|---|---|---|---|---|
| | | PIPER SERVICE AND OPTIONAL KITS | | |
| | 566-524 | AUXILIARY VACUUM PUMP INSTALLATION | | |
| | 753-910 | COUPLING ASSY KIT -Vacuum Pump Drive (Refer to Piper Service Bulletin #1026) | 1 | 2843001 thru 2843129 |
| | 757-112 | NITROGEN CYLINDER ASSY - (With fittings) | | |
| | 757-163 | MIXTURE CONTROL INDICATOR | | |
| | 760-210 | ALTERNATE STATIC SYSTEM INSTALLATION | | |
| | 760-297 | PITOT COVER | | |
| | 760-459 | CYLINDER HEAD TEMPERATURE GAUGE INSTALLATION | | |
| | 760-995 | AUTOFLITE II INSTALLATION - (With tracker) | | |
| | 760-996 | AUTOFLITE II INSTALLATION - (Without tracker) | | |
| | 761-000 | HEATED PITOT STATIC SYSTEM INSTALLATION | | |
| | 761-089 | AUXILIARY POWER RECEPTACLE INSTALLATION (Less External Power Connector Plug Assy, 89097-002) | | |
| | 763-828 | ENGINE BREATHER TUBE WINTERIZATION KIT | | |
| | 763-842 | ELT REPLACEMENT | | |
| | 763-848 | PRESSURE SENSITIVE SAFETY WINGWALK INSTALLATION | | |
| | 763-962 | DOOR JAMB SNUBBER INSTALLATION | | |
| | 763-966 | SHOULDER HARNESS INSTALLATION - Passenger seats | | |
| | 764-050 | CARBURETOR ICE DETECTOR INSTALLATION | | |
| | 766-635 | SUN VISOR INSTALLATION | | 2843010 and up |
| | 766-666 | INDUCTION AIRBOX MODIFICATION KIT (Refer to Piper Service Letter #1024) | 1 | 2843001 thru 2843237 |
| | 766-677 | WING RIB OIL CAN REPAIR | | 2843001 thru 2843414 |
| | 766-681 | LOW NOISE MUFFLER MODIFICATION KIT (Refer to Piper Service Bulletin #1057) | 1 | 2843134 thru 2843428 |
| | 767-312 | SWITCH REPL. AUX VACUUM | | 2843001 thru 2843202 |
| | 767-316 | S-TEC 55X AUTOPILOT STEERING INFORMATION KIT (Refer to Piper Service Bulletin #1083 - Latest Revision for serial numbers 2843415 thru 2843426; 2843429 thru 2843437; 2843439 thru 2843445, 2843447; 2843449 thru 2843462, 2843464, 2843466, 2843467, 2843469 thru 2843471, 2843479 thru 2843483) | 1 | |
| | 767-363 | RIB REPAIR - INB'D WING | | 2843001 thru 2843546 |
| | 767-383 | WING AFT SPAR/FUSELAGE ATTACH FTG | | |
| | 767-382 | P5/R5 ELECTRICAL CONNECTOR REPLACEMENT (Refer to Piper Service Bulletin #1153 - Latest Revision) | | 2843001 thru 2843597 |
| | 767-390 thru 767-396, 767-399 | ELECTRICAL CONTACTOR REPLACEMENT KIT | 1 | |
| | 767-419 | HIRF UPGRADE KIT (Refer to Piper Service Bulletin #1162 - latest revision) | | 2843598 thru 2843620 |
| | 767-502 | MULTILINK UPGRADE - Entegra | | 2843598 and up |
| | 767-519 | SPRING INSTALLATION - Nose Gear Centering (Refer to Piper Service Bulletin #1167 - latest revision) | | 2843001 thru 2843604 |
| | 79700-004 | CABLE KIT | | 2843309 and up |
| | 767-422 | SOFTWARE UPGRADE (850-00013-339) (Refer to Piper Service Bulletin #1162 - latest revision) | | 2843598 thru 2843620 |
| | 88420-002 | E.G.T. THERMOCOUPLE UPGRADE | | 2843001 Thru 2843649 |
| | 88410-002 | KIT - DECAL-ATTITUDE INDICATOR | | 2843598 thru 2843652 |

-ITEM NOT ILLUSTRATED

When ordering, always specify Part Number, Description, and Serial Number of Aircraft

THIS PAGE INTENTIONALLY LEFT BLANK

| Figure and Index Number | Part Number | Nomenclature | No. Req. | Serial Numbers Affected |
|---|---|---|---|---|
| | | MISCELLANEOUS HARDWARE AND CONSUMABLES | | |
| | 1766-005 | AEROFICHE - Common hardware part number cross reference (Common hardware to Piper part number cross reference available on Aerofiche. Contact your local Piper distributor for more information) | | |
| | 279-035 | ADHESIVE HYSOL - 9309, 1 quart kit (Used on wing installation. Some items are also used in other places on aircraft)(Location and quantity of items is found on applicable installation drawings) | AR | |
| | 279-041 | ADHESIVE HYSOL - 9309, 50 gram kit (Used on wing installation. Some items are also used in other places on aircraft)(Location and quantity of items is found on applicable installation drawings) | AR | |
| | 522-650 | RIVET - Cherry max, 4-2 (Used on wing installation. Some items are also used in other places on aircraft)(Location and quantity of items is found on applicable installation drawings) | AR | |
| | 522-651 | RIVET - Cherry max, 4-3 (Used on wing installation. Some items are also used in other places on aircraft)(Location and quantity of items is found on applicable installation drawings) | AR | |
| | 420-250 | RIVET - MS20470AD6-9 (Used on wing installation. Some items are also used in other places on aircraft)(Location and quantity of items is found on applicable installation drawings) | AR | |
| | 420-233 | RIVET - MS20470AD5-7 (Used on wing installation. Some items are also used in other places on aircraft)(Location and quantity of items is found on applicable installation drawings) | AR | |
| | 420-234 | RIVET - MS20470AD5-8 (Used on wing installation. Some items are also used in other places on aircraft)(Location and quantity of items is found on applicable installation drawings) | AR | |
| | 420-235 | RIVET - MS20470AD5-9 (Used on wing installation. Some items are also used in other places on aircraft)(Location and quantity of items is found on applicable installation drawings) | AR | |
| | 680-634 | RIVET - HL18-6-6 (Used on wing installation. Some items are also used in other places on aircraft)(Location and quantity of items is found on applicable installation drawings) | AR | |
| | 680-679 | RIVET - HL18-6-5 (Used on wing installation. Some items are also used in other places on aircraft)(Location and quantity of items is found on applicable installation drawings) | AR | |
| | 680-677 | RIVET - HL18-6-4 (Used on wing installation. Some items are also used in other places on aircraft)(Location and quantity of items is found on applicable installation drawings) | AR | |
| | 522-602 | RIVET - CR2245-4-3 (Location and quantity of items is found on applicable installation drawings) | AR | |

-ITEM NOT ILLUSTRATED

When ordering, always specify Part Number, Description, and Serial Number of Aircraft

| Figure and Index Number | Part Number | Nomenclature | No. Req. | Serial Numbers Affected |
|---|---|---|---|---|
| | | MISCELLANEOUS HARDWARE AND CONSUMABLES (CONT) | | |
| | 522-603 | RIVET - CR2245-4-4 (Location and quantity of items is found on applicable installation drawings) | AR | |
| | 522-604 | RIVET - CR2245-4-5 (Location and quantity of items is found on applicable installation drawings) | AR | |
| | 522-605 | RIVET - CR2245-4-6 (Location and quantity of items is found on applicable installation drawings) | AR | |
| | 522-690 | RIVET - CR3245-4-2 (Location and quantity of items is found on applicable installation drawings) | AR | |
| | 522-882 | RIVET - CR2249-4-2 (Location and quantity of items is found on applicable installation drawings) | AR | |
| | 523-171 | RIVET - NAS1769D4-2 (Location and quantity of items is found on applicable installation drawings) | AR | |
| | 523-172 | RIVET - NAS1769D4-3 (Location and quantity of items is found on applicable installation drawings) | AR | |
| | 680-684 | RIVET - HL18-10-10 (Location and quantity of items is found on applicable installation drawings) | AR | |
| | 680-687 | RIVET - HL19-6-10 (Location and quantity of items is found on applicable installation drawings) | AR | |
| | 680-638 | RIVET - HL19-6-11 (Location and quantity of items is found on applicable installation drawings) | AR | |
| | 556-122 | COLLAR - HL82-6AW (Location and quantity of items is found on applicable installation drawings) | AR | |
| | 557-352 | COLLAR - HL70-10 (Location and quantity of items is found on applicable installation drawings) | AR | |
| | 420-200 | RIVET - MS20470AD3-3 (Location and quantity of items is found on applicable installation drawings) | AR | |
| | 520-200 | RIVET - MS20470AD3-3.5 (Location and quantity of items is found on applicable installation drawings) | AR | |
| | 420-217 | RIVET - MS20470AD4-5 (Location and quantity of items is found on applicable installation drawings) | AR | |
| | 423-183 | RIVET - CR3245-4-1 (Location and quantity of items is found on applicable installation drawings) | AR | |
| | 522-690 | RIVET - CR3245-4-2 (Location and quantity of items is found on applicable installation drawings) | AR | |

-ITEM NOT ILLUSTRATED

| Figure and Index Number | Part Number | Nomenclature | No. Req. | Serial Numbers Affected |
|---|---|---|---|---|
| | | MISCELLANEOUS HARDWARE AND CONSUMABLES (CONT) | | |
| | 423-185 | RIVET - CR3245-4-3 (Location and quantity of items is found on applicable installation drawings) | AR | |
| | 279-021 | ADHESIVE - RTV-157 (Location and quantity of items is found on applicable installation drawings) | AR | |
| | 279-029 | ADHESIVE - RTV-133 (Location and quantity of items is found on applicable installation drawings) | AR | |
| | 279-038 | ADHESIVE - Versalok 204, kit (Location and quantity of items is found on applicable installation drawings) | AR | |
| | 912-020 | ADHESIVE - EC801 (Location and quantity of items is found on applicable installation drawings) | AR | |
| | 912-018 | CEMENT - A56B (Location and quantity of items is found on applicable installation drawings) | AR | |
| | 912-019 | CEMENT - EC1300L (Location and quantity of items is found on applicable installation drawings) | AR | |
| | 921-387 | CLEANER - M-0764 (Location and quantity of items is found on applicable installation drawings) | AR | |
| | 922-950 | LUBRICANT - OCR 404 (Location and quantity of items is found on applicable installation drawings) | AR | |
| | 923-384 | OIL - Refrigeration, 14 ounce bottle (Approved for usage in R134a systems) | AR | |
| | 179-754 | SEALANT - PR1422B2 (Location and quantity of items is found on applicable installation drawings) | AR | |
| | 179-760 | SEALANT - RTV-108 (Location and quantity of items is found on applicable installation drawings) | AR | |
| | 179-771 | SEALANT - 5674-7 (Location and quantity of items is found on applicable installation drawings) | AR | |
| | 279-029 | SEALANT - RTV133 (Location and quantity of items is found on applicable installation drawings) | AR | |
| | 279-034 | SEALANT - PR1435G (Location and quantity of items is found on applicable installation drawings) | AR | |
| | 279-036 | SEALANT - PR1403GB2 (Location and quantity of items is found on applicable installation drawings) | AR | |
| | 279-058 | SEALANT - 1100FS, white (Location and quantity of items is found on applicable installation drawings) | AR | |

-ITEM NOT ILLUSTRATED

| Figure and Index Number | Part Number | Nomenclature | No. Req. | Serial Numbers Affected |
|---|---|---|---|---|
| | | MISCELLANEOUS HARDWARE AND CONSUMABLES (CONT) | | |
| | 189-721 | TAPE - Window, PVC foam, gray, 1 inch wide, roll (Location and quantity of items is found on applicable installation drawings) | AR | |
| | 189-750 | TAPE - Windshield, black vinyl, 1 1/2 inch wide, roll (Location and quantity of items is found on applicable installation drawings) | AR | |
| | 289-789 | TAPE - Power plant, Teflon, 1 inch wide, roll (Location and quantity of items is found on applicable installation drawings) | AR | |
| | 289-791 | TAPE - Storm window seal, 3/16 inch wide, roll (Location and quantity of items is found on applicable installation drawings) | AR | |
| | 380-002 | TAPE - Window, PVC foam, gray, 1 inch wide, roll (Location and quantity of items is found on applicable installation drawings) | AR | |
| | 924-450 | TAPE - Air cond. condenser installation, 1 inch wide, roll (Location and quantity of items is found on applicable installation drawings) | AR | |
| | 924-529 | WAX - Gary's cream, gallon (Location and quantity of items is found on applicable installation drawings) | AR | |
| | 101015 | HARDWARE - Stainless steel (optional) | AR | |

-ITEM NOT ILLUSTRATED

THIS PAGE INTENTIONALLY LEFT BLANK

**GRIDS 2E16 THRU 2E24**
**INTENTIONALLY BLANK**

# NUMERICAL INDEX


| Part Number | Figure and Index No. |
|---|---|
| 02585-004 | 34-60 |
| 02585-005 | 34-60A |
| 02585-006 | 34-60B |
| 02591-002 | 56-2 |
| 06311-014 | 68-9 |
| 06311-017 | 68-9 |
| 13071-000 | 19-24 |
| 13074-002 | 20-2 |
| 14470-000 | 45-15 |
| 14513-000 | 42-11 |
| 15086-000 | 31-49 |
| 15086-000 | 49-18A |
| 15206-002 | 20-9 |
| 15207-000 | 20-10 |
| 15266-000 | 19-3 |
| 18219-002 | 44-27 |
| 18321-000 | 45-29 |
| 18321-000 | 59-3 |
| 18457-000 | 2-5 |
| 19099-000 | 72-30 |
| 19099-002 | 72-30 |
| 19336-000 | 34-33 |
| 19336-000 | 35-10 |
| 19336-001 | 34-33A |
| 19336-001 | 35-10A |
| 19365-002 | 34-35 |
| 19807-002 | 62-41 |
| 21230-000 | 45-56 |
| 22103-003 | 44-35A |
| 22105-003 | 54-42 |
| 22482-000 | 12-78 |
| 23969-002 | 59-9 |
| 23969-002 | 59-42A |
| 23969-002 | 59-61 |
| 23969-002 | 59-78A |
| 23969-002 | 60-50 |
| 23969-002 | 60A-34C |
| 23969-003 | 60-49 |
| 23969-003 | 60A-34D |
| 23969-003 | 63-20 |
| 24048-000 | 44-5 |
| 24791-006 | 41-12 |
| 24793-004 | 41-14 |
| 24820-000 | 41-16 |
| 26453-005 | 35-6 |
| 26898-003 | 59-37 |
| 26898-005 | 64-13 |
| 26898-008 | 59-37 |
| 26898-009 | 64-13 |
| 31197-000 | 45-28 |
| 32380-000 | 35-7 |
| 35118-004 | 3-20 |
| 35118-005 | 3-20A |
| 35118-012 | 3-36 |
| 35118-013 | 3-33 |
| 35118-019 | 3-37 |
| 35118-020 | 2-3 |
| 35118-020 | 3-19 |

| Part Number | Figure and Index No. |
|---|---|
| 35118-021 | 2-3A |
| 35118-021 | 3-19A |
| 35118-022 | 3-27 |
| 35118-023 | 3-27A |
| 35118-024 | 3-21 |
| 35118-025 | 3-21A |
| 35118-026 | 3-22 |
| 35118-027 | 3-22A |
| 35118-028 | 3-35 |
| 35118-029 | 3-35A |
| 35118-030 | 3-26 |
| 35118-031 | 3-26A |
| 35118-047 | 3-24A |
| 35118-049 | 3-24 |
| 35140-000 | 3-25 |
| 35140-001 | 3-25A |
| 35140-002 | 3-25B |
| 35142-000 | 11-11 |
| 35142-001 | 11-11A |
| 35158-002 | 19-17 |
| 35166-000 | 3-28 |
| 35166-001 | 3-28A |
| 35168-008 | 4-2 |
| 35168-009 | 4-2A |
| 35168-012 | 4-6 |
| 35168-013 | 4-6A |
| 35174-004 | 4-8 |
| 35174-005 | 4-8A |
| 35182-000 | 3-29 |
| 35182-001 | 3-29A |
| 35203-000 | 59-44A |
| 35207-000 | 60-40 |
| 35214-002 | 59-44 |
| 35270-000 | 19-40 |
| 35281-000 | 19-45 |
| 35282-000 | 19-44 |
| 35283-000 | 19-43 |
| 35284-002 | 19-42 |
| 35300-002 | 41-1 |
| 35328-006 | 45-1 |
| 35375-000 | 59-62A |
| 35378-000 | 4-25 |
| 35378-001 | 4-25A |
| 35402-000 | 49-20 |
| 35402-004 | 49-56 |
| 35420-004 | 4-13 |
| 35421-010 | 4-14 |
| 35421-011 | 4-14A |
| 35422-004 | 4-13A |
| 35432-000 | 19-45A |
| 35433-000 | 19-42A |
| 35448-000 | 40-9G |
| 35457-000 | 45-21 |
| 35476-001 | 48-62 |
| 35507-002 | 39-27 |
| 35573-000 | 4-48 |
| 35592-000 | 3-30 |
| 35592-001 | 3-30A |

| Part Number | Figure and Index No. |
|---|---|
| 35594-002 | 2-8A |
| 35594-005 | 2-8B |
| 35603-020 | 4-42 |
| 35603-021 | 4-42A |
| 35603-026 | 4-44 |
| 35603-027 | 4-44A |
| 35614-008 | 48-61 |
| 35614-009 | 48-61A |
| 35614-012 | 48-61B |
| 35614-013 | 48-61C |
| 35614-016 | 48-47 |
| 35615-000 | 3-31 |
| 35615-001 | 3-31A |
| 35615-004 | 3-32 |
| 35615-005 | 3-32A |
| 35616-000 | 4-19 |
| 35616-001 | 4-19A |
| 35617-000 | 4-20 |
| 35617-001 | 4-20A |
| 35618-000 | 4-21 |
| 35618-001 | 4-21A |
| 35619-004 | 4-22 |
| 35619-005 | 4-22A |
| 35620-000 | 4-23 |
| 35620-001 | 4-23A |
| 35621-000 | 4-24 |
| 35621-001 | 4-24A |
| 35632-000 | 4-7 |
| 35632-001 | 4-7A |
| 35632-004 | 4-10 |
| 35632-005 | 4-10A |
| 35633-004 | 2-9 |
| 35633-004 | 47-1 |
| 35633-005 | 2-9A |
| 35633-005 | 47-1A |
| 35634-010 | 4-47 |
| 35634-011 | 4-47A |
| 35634-014 | 4-41 |
| 35634-015 | 4-41A |
| 35636-000 | 4-38 |
| 35637-000 | 4-28 |
| 35637-001 | 4-28A |
| 35638-000 | 47-8 |
| 35638-001 | 47-8A |
| 35640-000 | 2-10 |
| 35640-000 | 5-1 |
| 35640-001 | 2-10A |
| 35640-001 | 5-1A |
| 35640-002 | 5-2 |
| 35640-003 | 5-2A |
| 35640-004 | 5-3 |
| 35640-005 | 5-3A |
| 35640-006 | 5-16 |
| 35640-007 | 5-16A |
| 35640-008 | 5-5 |
| 35640-009 | 5-5A |
| 35640-010 | 5-6 |
| 35640-011 | 5-6A |

| Part Number | Figure and Index No. |
|---|---|
| 35640-012 | 5-7 |
| 35640-013 | 5-7A |
| 35640-014 | 5-8 |
| 35640-015 | 5-8A |
| 35640-016 | 5-9 |
| 35640-017 | 5-9A |
| 35640-018 | 5-10 |
| 35640-019 | 5-10A |
| 35640-020 | 5-17 |
| 35640-021 | 5-18 |
| 35640-022 | 5-13 |
| 35640-028 | 5-15 |
| 35640-029 | 5-15A |
| 35641-006 | 2-12B |
| 35641-007 | 2-12C |
| 35641-008 | 2-12D |
| 35641-009 | 2-12E |
| 35642-000 | 3-4 |
| 35642-001 | 3-4A |
| 35644-004 | 23-21 |
| 35644-005 | 23-21A |
| 35669-023 | 26-22 |
| 35669-027 | 49-55 |
| 35669-044 | 26-13B |
| 35669-105 | 68-12 |
| 35669-154 | 69-6 |
| 35688-009 | 33-19 |
| 35696-002 | 39-34 |
| 35715-003 | 45-5 |
| 35725-002 | 2-6 |
| 35731-000 | 4-46 |
| 35731-001 | 4-46A |
| 35789-002 | 45-10 |
| 35802-003 | 2-51 |
| 35944-004 | 26-2 |
| 35944-015 | 26-1 |
| 36500-002 | 72-5 |
| 36511-002 | 44-40 |
| 36511-002 | 54-2 |
| 36511-003 | 44-40A |
| 36511-003 | 54-2A |
| 36558-002 | 54-9 |
| 36558-004 | 54-10 |
| 36559-003 | 26-43 |
| 36559-005 | 26-41 |
| 36559-006 | 26-42 |
| 36565-002 | 10-54 |
| 36565-003 | 10-53 |
| 36572-003 | 13-57 |
| 36588-002 | 31-69 |
| 36588-003 | 31-69A |
| 36598-002 | 13-45 |
| 36612-002 | 55-30 |
| 36615-005 | 55-28 |
| 36616-003 | 55-29 |
| 36625-002 | 47-12 |
| 36625-003 | 47-12A |
| 36706-002 | 15-5 |

# NUMERICAL INDEX


| Part Number | Figure and Index No. |
|---|---|
| 36722-004 | 13-66 |
| 36789-040 | 62-52 |
| 36806-006 | 2-13 |
| 36806-007 | 2-13A |
| 37511-026 | 13-3D |
| 37848-002 | 34-15 |
| 37880-002 | 23-51 |
| 37880-002 | 26-27 |
| 37880-003 | 23-51A |
| 37880-003 | 26-27A |
| 37881-003 | 26-29 |
| 37882-002 | 26-14 |
| 37882-004 | 26-15 |
| 37897-002 | 4-16 |
| 37902-005 | 32-8C |
| 37902-006 | 32-9 |
| 37902-008 | 32-8 |
| 37925-006 | 26-7 |
| 37925-008 | 26-5 |
| 37925-009 | 26-6 |
| 37929-002 | 26-24 |
| 37994-002 | 39-30 |
| 37994-004 | 39-30A |
| 37997-002 | 55-21 |
| 37997-002 | 57-5 |
| 38019-003 | 40-10 |
| 38019-005 | 40-17 |
| 38118-000 | 3-5 |
| 38118-002 | 3-5A |
| 38118-005 | 2-45 |
| 38217-004 | 3-8 |
| 38217-005 | 3-8A |
| 38222-000 | 15-4 |
| 38571-002 | 4-15 |
| 38572-002 | 2-52 |
| 38583-002 | 47-25 |
| 38643-008 | 2-1 |
| 38643-008 | 3-1 |
| 38643-008 | 4-1 |
| 38643-009 | 2-1A |
| 38643-009 | 3-1A |
| 38643-009 | 4-1A |
| 38905-003 | 59-55 |
| 38999-002 | 8-29 |
| 38999-003 | 8-29A |
| 39769-002 | 8-8 |
| 39822-003 | 47-4 |
| 39856-002 | 47-5 |
| 39995-052 | 40-22 |
| 39995-052 | 40-23 |
| 41001-010 | 48-1 |
| 41001-010 | 48-68 |
| 42513-004 | 64-1 |
| 44259-001 | 64-2 |
| 50111-000 | 49-15 |
| 51006-000 | 36-15 |
| 53916-000 | 61-14 |
| 56958-028 | 45-61 |

| Part Number | Figure and Index No. |
|---|---|
| 56976-037 | 47-13 |
| 61879-002 | 40-8 |
| 62002-002 | 15-37 |
| 62002-003 | 15-38 |
| 62002-004 | 15-39 |
| 62019-003 | 52-4 |
| 62021-000 | 3-3 |
| 62021-001 | 3-3A |
| 62033-000 | 47-9 |
| 62044-000 | 47-15 |
| 62059-000 | 47-16 |
| 62060-004 | 47-11 |
| 62060-005 | 47-11A |
| 62061-002 | 3-17 |
| 62061-004 | 4-18 |
| 62066-000 | 3-18 |
| 62071-000 | 4-3 |
| 62071-001 | 4-3A |
| 62072-000 | 4-4 |
| 62072-001 | 4-4A |
| 62073-002 | 4-6B |
| 62073-003 | 4-6C |
| 62079-000 | 4-5 |
| 62085-002 | 3-6A |
| 62085-003 | 3-6 |
| 62087-000 | 3-9 |
| 62091-002 | 3-15 |
| 62095-000 | 2-7 |
| 62105-000 | 4-11 |
| 62105-002 | 4-12 |
| 62109-000 | 2-44 |
| 62109-000 | 10-69 |
| 62121-000 | 2-53 |
| 62129-003 | 4-31A |
| 62129-004 | 4-31 |
| 62129-007 | 4-32A |
| 62129-008 | 4-32 |
| 62219-000 | 45-35 |
| 62220-004 | 45-2 |
| 62230-003 | 41-3 |
| 62231-005 | 41-2 |
| 62232-004 | 41-4 |
| 62305-000 | 46-5 |
| 62320-003 | 6-13 |
| 62320-006 | 6-22 |
| 62320-007 | 6-22A |
| 62324-000 | 6-23 |
| 62324-001 | 6-23A |
| 62327-000 | 6-7 |
| 62328-000 | 6-8 |
| 62328-000 | 6-24A |
| 62328-001 | 6-8A |
| 62328-001 | 6-24 |
| 62330-000 | 6-11 |
| 62330-001 | 6-11A |
| 62331-000 | 6-12 |
| 62331-001 | 6-12A |
| 62332-000 | 6-10A |

| Part Number | Figure and Index No. |
|---|---|
| 62332-002 | 6-10 |
| 62336-000 | 6-17 |
| 62336-008 | 6-17A |
| 62371-008 | 4-37 |
| 62400-002 | 13-67 |
| 62410-000 | 9-30 |
| 62410-001 | 9-30A |
| 62411-002 | 11-8 |
| 62411-003 | 11-8 |
| 62412-002 | 9-29 |
| 62413-000 | 12-38 |
| 62413-001 | 12-38A |
| 62414-000 | 12-41 |
| 62414-001 | 12-41A |
| 62421-000 | 10-65 |
| 62421-001 | 10-65A |
| 62423-000 | 9-37 |
| 62425-002 | 8-15B |
| 62426-006 | 9-10 |
| 62426-007 | 9-11 |
| 62427-000 | 9-12 |
| 62427-002 | 9-12A |
| 62428-000 | 10-32 |
| 62428-001 | 10-32A |
| 62429-000 | 9-13 |
| 62430-000 | 9-31 |
| 62433-000 | 8-5F |
| 62434-000 | 8-5G |
| 62438-000 | 8-3 |
| 62441-000 | 10-12 |
| 62441-001 | 10-12A |
| 62443-000 | 12-10 |
| 62444-005 | 12-13 |
| 62445-000 | 12-17 |
| 62448-000 | 11-9 |
| 62448-001 | 11-9A |
| 62451-000 | 12-18 |
| 62452-000 | 12-19 |
| 62452-001 | 12-19A |
| 62453-000 | 12-15 |
| 62455-000 | 12-20 |
| 62457-000 | 12-21 |
| 62457-001 | 12-21A |
| 62463-000 | 12-56 |
| 62464-000 | 12-57 |
| 62465-000 | 12-58 |
| 62471-000 | 12-27 |
| 62473-002 | 8-17 |
| 62477-000 | 9-33 |
| 62477-001 | 9-33A |
| 62483-002 | 9-79 |
| 62485-000 | 8-18 |
| 62485-001 | 8-18A |
| 62499-002 | 8-20 |
| 62505-000 | 9-36 |
| 62507-000 | 7-17 |
| 62509-004 | 9-35 |
| 62525-000 | 10-14 |

| Part Number | Figure and Index No. |
|---|---|
| 62525-001 | 10-14A |
| 62528-000 | 10-7 |
| 62528-001 | 10-7A |
| 62529-000 | 11-13 |
| 62531-000 | 11-5 |
| 62534-000 | 11-4 |
| 62536-004 | 10-62 |
| 62536-005 | 10-62A |
| 62537-000 | 11-3 |
| 62539-000 | 10-25 |
| 62540-000 | 10-26 |
| 62541-000 | 7-32 |
| 62541-001 | 7-32A |
| 62542-000 | 10-16 |
| 62542-001 | 10-16A |
| 62543-000 | 10-4 |
| 62544-000 | 10-11 |
| 62544-001 | 10-11A |
| 62546-000 | 10-31 |
| 62549-000 | 7-30 |
| 62550-000 | 10-63 |
| 62550-001 | 10-63A |
| 62551-000 | 10-18 |
| 62551-001 | 10-18A |
| 62554-000 | 10-5 |
| 62558-000 | 10-9 |
| 62558-001 | 10-9A |
| 62563-001 | 11-10A |
| 62563-002 | 11-10 |
| 62566-000 | 11-12 |
| 62571-000 | 9-69 |
| 62581-000 | 10-19 |
| 62581-001 | 10-19A |
| 62582-000 | 10-10 |
| 62583-000 | 10-64 |
| 62583-001 | 10-64A |
| 62598-000 | 10-41 |
| 62601-003 | 10-43 |
| 62603-000 | 10-38 |
| 62603-001 | 10-38A |
| 62618-000 | 11-14 |
| 62618-001 | 11-14A |
| 62619-000 | 11-15 |
| 62620-000 | 10-44 |
| 62630-000 | 12-9 |
| 62632-000 | 9-62 |
| 62633-000 | 9-63 |
| 62634-000 | 9-59 |
| 62635-000 | 9-58 |
| 62636-000 | 9-60 |
| 62637-000 | 9-57 |
| 62639-000 | 9-42 |
| 62639-001 | 9-42A |
| 62644-003 | 9-56 |
| 62645-004 | 12-36 |
| 62653-006 | 8-21 |
| 62656-000 | 9-52 |
| 62657-012 | 13-2 |

# NUMERICAL INDEX


| Part Number | Figure and Index No. |
|---|---|
| 62657-013 | 13-6A |
| 62657-014 | 13-6B |
| 62657-015 | 13-6C |
| 62657-016 | 13-6 |
| 62662-000 | 12-11 |
| 62664-000 | 10-45 |
| 62665-002 | 12-8 |
| 62674-001 | 8-22 |
| 62677-000 | 9-45 |
| 62688-008 | 10-60 |
| 62688-009 | 10-60A |
| 62695-002 | 11-7 |
| 62695-005 | 11-7 |
| 62697-002 | 9-78 |
| 62700-005 | 48-19 |
| 62701-008 | 48-8 |
| 62701-008 | 48-9 |
| 62701-012 | 48-12 |
| 62701-013 | 48-13 |
| 62701-047 | 50-3 |
| 62701-099 | 48-2 |
| 62701-100 | 48-6 |
| 62701-100 | 48-7 |
| 62701-101 | 49-31 |
| 62701-104 | 50-48 |
| 62701-113 | 48-10 |
| 62701-114 | 48-11 |
| 62701-122 | 48-3 |
| 62701-123 | 48-4 |
| 62701-124 | 48-5 |
| 62701-216 | 50-3 |
| 62703-033 | 52-5 |
| 62705-000 | 49-1 |
| 62706-006 | 49-5 |
| 62709-000 | 50-63 |
| 62710-002 | 48-59 |
| 62710-003 | 50-51 |
| 62711-002 | 48-15 |
| 62711-003 | 50-40 |
| 62711-003 | 50-43 |
| 62712-002 | 49-34 |
| 62712-003 | 48-18 |
| 62712-004 | 52-16 |
| 62713-003 | 48-17 |
| 62714-002 | 48-21 |
| 62714-002 | 50-45 |
| 62714-003 | 48-22 |
| 62714-004 | 50-46 |
| 62715-002 | 50-41 |
| 62716-007 | 52-8 |
| 62725-000 | 49-2 |
| 62727-000 | 49-51 |
| 62727-001 | 49-51A |
| 62733-000 | 49-12 |
| 62734-002 | 49-13 |
| 62736-000 | 49-14 |
| 62740-000 | 49-7 |
| 62743-002 | 48-23 |

| Part Number | Figure and Index No. |
|---|---|
| 62743-003 | 48-24 |
| 62743-004 | 48-25 |
| 62743-005 | 48-26 |
| 62743-006 | 48-27 |
| 62743-008 | 48-65 |
| 62743-008 | 50-47 |
| 62753-000 | 12-14 |
| 62762-000 | 48-20 |
| 62763-000 | 10-23 |
| 62764-000 | 49-21 |
| 62764-002 | 49-24 |
| 62768-000 | 48-31 |
| 62769-000 | 48-32 |
| 62778-000 | 52-10 |
| 62782-000 | 52-11D |
| 62784-000 | 52-11E |
| 62789-002 | 49-3 |
| 62820-000 | 49-27 |
| 62821-000 | 49-28 |
| 62829-003 | 51-2 |
| 62831-000 | 51-5 |
| 62832-000 | 51-6 |
| 62833-017 | 53-12 |
| 62833-018 | 50-16 |
| 62833-027 | 23-30 |
| 62833-037 | 50-59F |
| 62833-039 | 13-71 |
| 62833-046 | 44-6B |
| 62833-064 | 26-3 |
| 62833-078 | 34-4 |
| 62833-082 | 56-10A |
| 62833-083 | 56-38 |
| 62833-085 | 52-32A |
| 62833-086 | 52-32B |
| 62833-101 | 44-32A |
| 62833-101 | 44-38C |
| 62833-101 | 58-18B |
| 62833-101 | 58-19B |
| 62833-101 | 58-32B |
| 62833-104 | 54-44 |
| 62833-105 | 13-36 |
| 62833-107 | 13-44A |
| 62833-107 | 13-56A |
| 62833-127 | 51-4 |
| 62833-144 | 51-4A |
| 62834-002 | 52-8A |
| 62838-000 | 51-10 |
| 62839-000 | 52-18 |
| 62840-002 | 52-29 |
| 62840-003 | 52-30 |
| 62842-000 | 52-6E |
| 62845-002 | 52-17 |
| 62856-000 | 49-50 |
| 62856-001 | 49-50A |
| 62858-002 | 52-28 |
| 62858-003 | 49-29 |
| 62858-004 | 49-30 |
| 62867-002 | 29-14 |

| Part Number | Figure and Index No. |
|---|---|
| 62962-000 | 54-7 |
| 62962-000 | 54-38 |
| 62969-000 | 54-8 |
| 62980-002 | 40-28 |
| 62992-000 | 40-20 |
| 62998-000 | 40-42 |
| 62999-003 | 40-41 |
| 63020-002 | 13-72 |
| 63036-004 | 13-51 |
| 63037-000 | 9-38 |
| 63038-002 | 9-28 |
| 63039-000 | 13-43 |
| 63039-000 | 13-49 |
| 63039-004 | 44-15 |
| 63042-003 | 13-50 |
| 63045-000 | 13-48 |
| 63070-043 | 14-3 |
| 63070-044 | 14-3A |
| 63078-006 | 12-51 |
| 63078-008 | 2-53A |
| 63078-009 | 2-64 |
| 63078-012 | 2-53B |
| 63142-051 | 31-37 |
| 63142-055 | 31-35 |
| 63142-056 | 31-36 |
| 63144-000 | 31-23 |
| 63185-006 | 33-14 |
| 63186-002 | 15-22 |
| 63186-004 | 27-2 |
| 63186-007 | 59-51 |
| 63186-021 | 15-21 |
| 63186-033 | 27-5 |
| 63189-038 | 62-64 |
| 63189-039 | 62-65 |
| 63207-000 | 39-13 |
| 63211-000 | 69-3 |
| 63243-008 | 41-12E |
| 63285-000 | 8-11 |
| 63287-000 | 10-71 |
| 63288-000 | 10-72 |
| 63293-002 | 33-15 |
| 63300-014 | 19-29 |
| 63307-000 | 23-25 |
| 63310-000 | 23-46 |
| 63311-000 | 23-45 |
| 63311-003 | 23-48 |
| 63312-000 | 23-29 |
| 63312-002 | 23-44 |
| 63314-000 | 23-42 |
| 63315-000 | 23-41 |
| 63325-000 | 28-1 |
| 63332-003 | 23-5 |
| 63332-006 | 23-6 |
| 63338-000 | 27-1 |
| 63341-000 | 27-6 |
| 63342-000 | 27-7 |
| 63354-000 | 8-43 |
| 63355-009 | 28-6 |

| Part Number | Figure and Index No. |
|---|---|
| 63356-000 | 28-7 |
| 63357-000 | 28-8 |
| 63383-000 | 20-4 |
| 63391-002 | 49-11 |
| 63391-003 | 49-10 |
| 63392-000 | 16-2 |
| 63392-001 | 16-2A |
| 63393-000 | 16-3 |
| 63393-001 | 16-3A |
| 63395-000 | 18-9 |
| 63396-002 | 18-2 |
| 63398-000 | 17-4 |
| 63404-000 | 52-13 |
| 63405-002 | 52-12 |
| 63408-000 | 42-10B |
| 63409-002 | 52-9 |
| 63419-000 | 53-4 |
| 63420-008 | 53-3 |
| 63423-004 | 8-6 |
| 63436-000 | 8-4 |
| 63436-001 | 8-4A |
| 63451-000 | 53-15 |
| 63455-000 | 53-14 |
| 63456-000 | 53-10 |
| 63458-005 | 53-5 |
| 63459-019 | 29-2 |
| 63459-019 | 53-2 |
| 63464-000 | 29-6 |
| 63466-000 | 28-2 |
| 63468-000 | 29-7 |
| 63469-000 | 29-8 |
| 63469-001 | 29-9 |
| 63470-000 | 29-10 |
| 63473-007 | 29-1 |
| 63473-007 | 53-1 |
| 63478-000 | 29-12 |
| 63479-000 | 45-7 |
| 63481-002 | 29-3A |
| 63481-003 | 29-3B |
| 63481-005 | 29-3C |
| 63481-009 | 29-3 |
| 63485-000 | 29-13 |
| 63485-001 | 29-13B |
| 63485-002 | 29-13A |
| 63485-003 | 29-13C |
| 63500-002 | 17-12 |
| 63500-007 | 17-3 |
| 63501-003 | 17-6 |
| 63502-000 | 17-7 |
| 63504-000 | 17-13 |
| 63506-000 | 17-10 |
| 63509-000 | 17-15 |
| 63510-000 | 17-17 |
| 63513-000 | 17-2 |
| 63515-000 | 17-16 |
| 63530-000 | 50-17 |
| 63543-000 | 18-3 |
| 63544-000 | 18-4 |

# NUMERICAL INDEX


| Part Number | Figure and Index No. |
|---|---|
| 63545-000 | 18-5 |
| 63546-002 | 18-6 |
| 63550-000 | 18-8 |
| 63557-000 | 72-26 |
| 63560-002 | 15-8 |
| 63560-002 | 16-23 |
| 63560-003 | 16-24 |
| 63560-005 | 16-22 |
| 63561-005 | 16-12 |
| 63562-000 | 16-13 |
| 63563-000 | 16-20 |
| 63564-000 | 16-21 |
| 63566-002 | 16-17A |
| 63566-002 | 16-18 |
| 63566-003 | 16-17 |
| 63566-003 | 16-18A |
| 63567-000 | 16-19 |
| 63568-000 | 16-27 |
| 63569-000 | 16-14 |
| 63570-000 | 16-15 |
| 63571-000 | 16-16 |
| 63572-000 | 16-9 |
| 63573-000 | 16-4 |
| 63573-001 | 16-4A |
| 63575-000 | 16-5 |
| 63575-002 | 16-5A |
| 63584-000 | 15-6 |
| 63585-003 | 15-7A |
| 63585-004 | 15-7 |
| 63586-000 | 15-9 |
| 63586-001 | 15-9A |
| 63587-002 | 15-10 |
| 63587-003 | 15-11 |
| 63588-000 | 15-12 |
| 63595-000 | 2-14 |
| 63605-000 | 42-7 |
| 63633-015 | 54-13 |
| 63633-015 | 54-49 |
| 63633-055 | 54-48 |
| 63633-060 | 54-47 |
| 63633-100 | 57-18 |
| 63633-135 | 71-2 |
| 63633-136 | 71-2A |
| 63633-148 | 55-9 |
| 63633-198 | 40-31A |
| 63633-207 | 41-17 |
| 63633-207 | 54-30 |
| 63633-208 | 41-21 |
| 63633-208 | 54-31 |
| 63684-004 | 40-13 |
| 63744-009 | 14-14 |
| 63774-000 | 72-25 |
| 63779-000 | 49-18 |
| 63781-008 | 49-9 |
| 63782-003 | 49-17 |
| 63782-004 | 49-8 |
| 63806-000 | 45-22 |
| 63807-000 | 45-23 |

| Part Number | Figure and Index No. |
|---|---|
| 63837-000 | 45-26 |
| 63838-000 | 45-27 |
| 63842-006 | 46-1 |
| 63862-002 | 63-2 |
| 63862-016 | 59-46 |
| 63862-200 | 59-45 |
| 63862-201 | 59-45 |
| 63882-009 | 50-34 |
| 63882-031 | 54-33 |
| 63882-068 | 48-46 |
| 63886-004 | 62-29 |
| 63889-008 | 62-21 |
| 63889-008 | 62-35 |
| 63900-014 | 42-15 |
| 63900-019 | 2-22 |
| 63900-020 | 2-23 |
| 63900-023 | 33-11 |
| 63900-025 | 39-19 |
| 63900-030 | 3-11 |
| 63900-031 | 48-28 |
| 63900-037 | 48-29 |
| 63900-038 | 49-25 |
| 63900-039 | 49-26 |
| 63900-041 | 19-22 |
| 63900-050 | 13-52 |
| 63900-051 | 52-6D |
| 63900-055 | 50-57 |
| 63900-056 | 50-56 |
| 63900-061 | 50-59A |
| 63900-070 | 44-39 |
| 63900-075 | 44-39A |
| 63900-078 | 44-38B |
| 63900-108 | 26-26 |
| 63900-119 | 44-38A |
| 63900-124 | 50-65 |
| 63900-127 | 56-25A |
| 63900-131 | 28-16A |
| 63900-145 | 32-34A |
| 63900-145 | 32-36 |
| 63900-145 | 37-28 |
| 63900-147 | 32-34 |
| 63900-149 | 35-55 |
| 63900-149 | 35-59 |
| 63900-174 | 49-44B |
| 63901-009 | 28-10 |
| 63901-009 | 29-20 |
| 63901-017 | 23-3 |
| 63901-021 | 29-21 |
| 63901-022 | 29-22 |
| 63901-027 | 40-26 |
| 63901-028 | 29-24A |
| 63901-057 | 45-18 |
| 63901-059 | 28-10A |
| 63901-059 | 29-20A |
| 63901-060 | 23-3A |
| 63901-061 | 29-21A |
| 63901-062 | 29-22A |
| 63901-063 | 29-24 |

| Part Number | Figure and Index No. |
|---|---|
| 63901-077 | 45-16 |
| 63901-081 | 45-68 |
| 63901-177 | 45-17 |
| 63901-195 | 45-17 |
| 63904-029 | 37-9 |
| 63904-072 | 56-20 |
| 63904-080 | 56-23 |
| 63904-103 | 35-57 |
| 63904-112 | 55-27 |
| 63913-007 | 37-14 |
| 63913-007 | 37-25 |
| 63913-010 | 28-35 |
| 63913-026 | 40-21 |
| 63913-037 | 69-5 |
| 63913-044 | 37-26 |
| 63913-055 | 37-15 |
| 63913-081 | 37-10 |
| 63913-106 | 39-12 |
| 63913-115 | 39-58 |
| 63913-122 | 39-4 |
| 63913-123 | 39-3 |
| 63913-152 | 39-57 |
| 63913-172 | 39-49 |
| 63913-199 | 57-17 |
| 63913-209 | 40-27 |
| 63913-218 | 47-17 |
| 63914-007 | 28-11 |
| 63915-005 | 59-3C |
| 63915-006 | 28-36 |
| 63915-014 | 45-30 |
| 63915-017 | 19-41 |
| 63933-000 | 23-49 |
| 63933-000 | 26-40 |
| 63942-000 | 2-63 |
| 63942-001 | 2-63A |
| 63955-003 | 48-30 |
| 63955-004 | 48-14 |
| 63955-004 | 49-32 |
| 63955-005 | 48-16 |
| 63976-040 | 4-27B |
| 63976-041 | 39-38 |
| 63976-042 | 4-6D |
| 63976-050 | 65-28 |
| 63976-051 | 4-27C |
| 63976-060 | 3-14A |
| 63976-062 | 4-6E |
| 63976-070 | 4-30B |
| 64704-000 | 62-67A |
| 65003-003 | 53-13 |
| 65003-006 | 50-35 |
| 65003-055 | 62-63 |
| 65003-057 | 48-67 |
| 65007-004 | 20-6 |
| 65034-000 | 17-14 |
| 65050-000 | 53-11 |
| 65061-000 | 43-18 |
| 65114-000 | 12-44 |
| 65116-000 | 9-77A |

| Part Number | Figure and Index No. |
|---|---|
| 65117-000 | 9-77 |
| 65126-000 | 10-46 |
| 65126-001 | 10-46A |
| 65128-000 | 11-18 |
| 65128-001 | 11-18A |
| 65146-000 | 13-29A |
| 65150-000 | 43-2 |
| 65165-087 | 58-26 |
| 65192-009 | 70-17 |
| 65219-000 | 31-51 |
| 65244-000 | 50-20 |
| 65245-000 | 50-23 |
| 65246-000 | 50-7 |
| 65248-000 | 50-1 |
| 65249-002 | 50-8 |
| 65250-002 | 50-24 |
| 65251-000 | 50-21 |
| 65252-000 | 50-9 |
| 65253-000 | 50-12 |
| 65254-000 | 50-25 |
| 65258-004 | 50-19 |
| 65258-005 | 50-33 |
| 65258-009 | 50-22 |
| 65258-013 | 50-2 |
| 65276-002 | 20-29 |
| 65280-000 | 20-8 |
| 65291-003 | 43-15C |
| 65318-000 | 54-16 |
| 65319-002 | 23-39A |
| 65319-004 | 23-39 |
| 65341-000 | 18-10 |
| 65342-002 | 15-2 |
| 65342-002 | 18-1 |
| 65381-000 | 7-39B |
| 65383-000 | 11-16 |
| 65384-000 | 7-39 |
| 65429-002 | 45-55 |
| 65430-003 | 23-43 |
| 65431-000 | 7-39A |
| 65432-000 | 20-30 |
| 65492-006 | 23-1 |
| 65492-007 | 23-1A |
| 65494-000 | 12-48 |
| 65543-002 | 41-9 |
| 65545-000 | 54-6 |
| 65556-000 | 7-31 |
| 65570-000 | 9-76 |
| 65570-001 | 9-76A |
| 65572-000 | 9-32 |
| 65572-001 | 9-32A |
| 65573-002 | 9-75 |
| 65574-002 | 9-75A |
| 65586-004 | 6-14 |
| 65586-005 | 6-14A |
| 65587-000 | 6-15 |
| 65588-000 | 6-3 |
| 65589-000 | 6-4 |
| 65590-001 | 2-11A |

# NUMERICAL INDEX


| Part Number | Figure and Index No. |
|---|---|
| 65590-001 | 6-1A |
| 65590-003 | 6-18 |
| 65591-000 | 2-11 |
| 65591-000 | 6-1 |
| 65592-000 | 6-2 |
| 65592-001 | 6-2A |
| 65593-001 | 6-19 |
| 65594-001 | 6-20 |
| 65595-001 | 6-21 |
| 65632-003 | 50-49 |
| 65633-000 | 50-37 |
| 65635-000 | 50-38 |
| 65636-000 | 10-17 |
| 65639-000 | 50-50 |
| 65640-008 | 12-7 |
| 65646-000 | 54-5 |
| 65653-019 | 63-5A |
| 65654-006 | 49-6 |
| 65672-005 | 31-44 |
| 65674-015 | 31-24 |
| 65688-000 | 27-3 |
| 65688-001 | 27-3A |
| 65688-002 | 27-4 |
| 65688-003 | 27-4A |
| 65690-000 | 4-17 |
| 65690-001 | 4-17A |
| 65721-000 | 2-65 |
| 65722-000 | 2-65A |
| 65727-000 | 13-64 |
| 65735-018 | 31-42 |
| 65735-019 | 31-45 |
| 65740-002 | 14-10A |
| 65742-000 | 14-11 |
| 65773-000 | 2-54 |
| 65782-000 | 14-13 |
| 65786-002 | 4-14B |
| 65786-003 | 3-8B |
| 65786-005 | 3-8C |
| 65798-005 | 14-8 |
| 65826-007 | 14-7 |
| 65829-005 | 8-2A |
| 65829-006 | 8-2A |
| 65836-000 | 51-3 |
| 65837-002 | 51-1 |
| 65845-005 | 8-2 |
| 65845-006 | 8-2 |
| 65846-000 | 31-25A |
| 65846-002 | 31-25A |
| 65850-002 | 44-1 |
| 65865-000 | 31-56 |
| 65866-000 | 31-87A |
| 65867-000 | 31-57 |
| 65869-000 | 31-41 |
| 65870-000 | 31-59 |
| 65871-000 | 31-58 |
| 65887-000 | 20-30A |
| 65895-000 | 14-10 |
| 65896-002 | 14-9 |

| Part Number | Figure and Index No. |
|---|---|
| 65898-001 | 4-35 |
| 65898-007 | 4-39 |
| 65898-016 | 4-33 |
| 65898-017 | 4-33A |
| 65899-000 | 6-6 |
| 66534-002 | 32-5 |
| 66546-000 | 52-33 |
| 66580-002 | 59-12 |
| 66580-002 | 63-19 |
| 66597-000 | 4-26 |
| 66597-001 | 4-26A |
| 66598-000 | 4-27 |
| 66598-001 | 4-27A |
| 66599-000 | 4-29 |
| 66599-001 | 4-29A |
| 66614-000 | 48-71 |
| 66618-002 | 19-15 |
| 66618-003 | 19-15A |
| 66620-000 | 3-16 |
| 66621-000 | 3-14 |
| 66623-000 | 3-12 |
| 66623-001 | 3-12A |
| 66661-000 | 53-6 |
| 66662-015 | 19-6 |
| 66662-015 | 40-2 |
| 66673-000 | 37-27 |
| 66710-007 | 13-60 |
| 66710-015 | 13-60 |
| 66710-043 | 13-60 |
| 66751-000 | 72-70 |
| 66761-002 | 3-10 |
| 66761-003 | 3-10A |
| 66762-000 | 4-9 |
| 66768-000 | 45-36 |
| 66769-000 | 12-29 |
| 66774-000 | 44-17 |
| 66787-000 | 31-66 |
| 66787-000 | 57-19A |
| 66789-000 | 54-41 |
| 66789-000 | 59-4 |
| 66793-003 | 13-7 |
| 66793-018 | 13-1 |
| 66793-019 | 13-5 |
| 66795-000 | 10-68 |
| 66795-000 | 11-6 |
| 66796-000 | 11-2 |
| 66802-011 | 33-13 |
| 66804-000 | 31-53 |
| 66805-000 | 31-54 |
| 66815-000 | 47-3 |
| 66820-000 | 23-2A |
| 66821-005 | 26-23 |
| 66822-009 | 15-16 |
| 66822-010 | 15-17 |
| 66835-000 | 44-26 |
| 66843-002 | 20-5 |
| 66965-000 | 7-24 |
| 66969-002 | 9-15 |

| Part Number | Figure and Index No. |
|---|---|
| 66969-003 | 9-15A |
| 66972-000 | 17-9 |
| 66975-002 | 17-5 |
| 66975-004 | 15-1 |
| 66975-004 | 17-1 |
| 66979-000 | 44-3 |
| 66980-000 | 44-41 |
| 66980-000 | 54-3 |
| 67135-003 | 28-9 |
| 67136-005 | 8-41 |
| 67137-000 | 8-42 |
| 67138-000 | 8-44 |
| 67139-000 | 8-45 |
| 67193-003 | 52-27 |
| 67196-007 | 65-9 |
| 67206-002 | 44-24 |
| 67214-000 | 44-4 |
| 67215-003 | 44-7 |
| 67216-000 | 44-7A |
| 67218-000 | 44-8 |
| 67218-002 | 44-8A |
| 67221-000 | 44-9 |
| 67223-000 | 44-2 |
| 67224-003 | 44-24A |
| 67225-000 | 44-36 |
| 67232-047 | 31-25 |
| 67258-000 | 8-13 |
| 67259-002 | 8-12 |
| 67262-002 | 9-34 |
| 67262-003 | 9-34A |
| 67266-002 | 8-5 |
| 67266-004 | 8-5 |
| 67286-000 | 10-30 |
| 67291-000 | 9-43 |
| 67291-001 | 9-43A |
| 67321-000 | 52-3K |
| 67330-012 | 31-27 |
| 67404-002 | 59-1 |
| 67404-003 | 59-2 |
| 67462-008 | 36-10 |
| 67487-004 | 64-15 |
| 67487-005 | 60-51 |
| 67533-000 | 32-31 |
| 67661-000 | 46-3 |
| 67700-025 | 46-6 |
| 67700-029 | 40-19 |
| 67700-056 | 46-7 |
| 67700-057 | 46-8 |
| 67700-058 | 28-4 |
| 67700-088 | 40-30 |
| 67700-150 | 69-4 |
| 67700-160 | 69-2 |
| 67700-172 | 39-17 |
| 67700-172 | 69-4 |
| 67700-185 | 39-29A |
| 67700-300 | 39-6 |
| 67700-301 | 39-35 |
| 67700-403 | 39-29 |

| Part Number | Figure and Index No. |
|---|---|
| 67700-422 | 39-16 |
| 67705-000 | 54-21 |
| 67723-000 | 2-55 |
| 67723-001 | 2-55A |
| 67768-002 | 39-28 |
| 67771-002 | 32-4 |
| 67785-017 | 31-21 |
| 67786-000 | 31-22 |
| 67904-012 | 33-12 |
| 67904-013 | 33-12A |
| 67917-017 | 31-21 |
| 68022-014 | 35-53 |
| 68028-003 | 52-7 |
| 68094-003 | 33-23 |
| 68110-000 | 3-7A |
| 68111-000 | 3-7 |
| 68119-000 | 3-13 |
| 68179-007 | 13-53 |
| 68179-008 | 13-54 |
| 68272-002 | 8-24 |
| 68272-003 | 8-25 |
| 68272-004 | 8-26 |
| 68273-002 | 8-27 |
| 68414-003 | 50-36 |
| 68416-002 | 31-46 |
| 68416-003 | 31-46A |
| 68426-000 | 15-3 |
| 68427-000 | 16-10 |
| 68428-000 | 16-11 |
| 68429-000 | 16-6 |
| 68429-001 | 16-6A |
| 68430-000 | 16-7 |
| 68430-001 | 16-7A |
| 68431-000 | 16-8 |
| 68431-001 | 16-8A |
| 68467-000 | 28-3 |
| 68472-000 | 50-54 |
| 68488-002 | 31-86 |
| 68491-000 | 50-32 |
| 68499-004 | 31-48 |
| 68499-005 | 31-48A |
| 68539-000 | 7-28 |
| 68540-000 | 7-29 |
| 68540-001 | 7-29A |
| 68555-005 | 13-9 |
| 68555-005 | 72-73 |
| 68556-000 | 31-46B |
| 68556-001 | 31-46C |
| 68557-000 | 52-7A |
| 68558-009 | 52-3 |
| 68584-000 | 31-50 |
| 68671-000 | 31-47 |
| 68699-011 | 44-10 |
| 68770-012 | 38-19 |
| 68770-014 | 54-43 |
| 68770-018 | 44-35B |
| 68771-006 | 44-35 |
| 68771-010 | 38-20 |

# NUMERICAL INDEX


| Part Number | Figure and Index No. |
|---|---|
| 68778-000 | 40-44 |
| 68804-005 | 59-58 |
| 68807-200 | 62-30 |
| 68817-050 | 7-18 |
| 69015-004 | 45-20 |
| 69042-000 | 39-10 |
| 69077-000 | 52-14 |
| 69229-000 | 54-17 |
| 69273-000 | 54-23 |
| 69274-000 | 54-22 |
| 69275-000 | 54-32 |
| 69278-003 | 54-49A |
| 69279-000 | 54-20 |
| 69312-007 | 8-40 |
| 69317-000 | 40-29 |
| 69318-000 | 51-12 |
| 69325-020 | 62-50 |
| 69325-156 | 62-17 |
| 69325-200 | 59-63 |
| 69403-003 | 31-40 |
| 69439-000 | 37-1 |
| 69486-000 | 26-25 |
| 69624-000 | 15-19 |
| 69669-020 | 57-27 |
| 69669-117 | 13-74 |
| 69669-118 | 13-75 |
| 69669-120 | 58-7A |
| 69669-151 | 31-33 |
| 69669-171 | 13-65 |
| 69669-200 | 31-2E |
| 69669-204 | 56-39 |
| 69669-204 | 57-10B |
| 69669-205 | 64-1A |
| 69738-000 | 9-21 |
| 69739-000 | 9-23 |
| 69740-002 | 9-22 |
| 69885-002 | 55-7 |
| 69885-003 | 55-8 |
| 69885-012 | 55-6 |
| 69891-014 | 9-24 |
| 69891-015 | 9-24A |
| 69891-017 | 9-24C |
| 69891-018 | 9-24B |
| 69992-002 | 55-5 |
| 70371-002 | 44-28 |
| 70371-002 | 54-40 |
| 70371-003 | 44-29 |
| 70371-003 | 54-36 |
| 72091-000 | 47-7 |
| 73290-002 | 64-6 |
| 73508-002 | 64-5 |
| 73965-005 | 56-5 |
| 73965-010 | 56-5 |
| 73965-019 | 56-6 |
| 73965-020 | 56-6 |
| 74075-002 | 64-7 |
| 74075-003 | 64-7A |
| 75619-005 | 60-30 |

| Part Number | Figure and Index No. |
|---|---|
| 75619-005 | 60A-30 |
| 75619-006 | 60-29 |
| 75619-006 | 60A-29 |
| 76114-000 | 10-3 |
| 76115-000 | 10-8 |
| 76115-001 | 10-8A |
| 76119-000 | 10-37 |
| 76119-001 | 10-37A |
| 76120-000 | 10-52 |
| 76120-001 | 10-52A |
| 76121-000 | 10-70 |
| 76123-004 | 10-58 |
| 76123-005 | 10-58A |
| 76126-000 | 10-13 |
| 76129-006 | 54-4 |
| 76129-007 | 54-4A |
| 76132-003 | 9-9 |
| 76136-000 | 8-19 |
| 76137-002 | 8-14 |
| 76140-003 | 9-14 |
| 76140-004 | 9-14A |
| 76143-000 | 14-21 |
| 76160-007 | 33-10 |
| 76161-018 | 33-1 |
| 76161-019 | 33-1A |
| 76172-003 | 34-8 |
| 76175-000 | 34-7 |
| 76176-000 | 34-19 |
| 76176-000 | 35-11 |
| 76178-000 | 34-39 |
| 76187-000 | 34-38 |
| 76191-003 | 31-38 |
| 76199-012 | 33-5 |
| 76199-013 | 33-5A |
| 76217-000 | 10-33 |
| 76217-002 | 10-34 |
| 76217-003 | 10-34A |
| 76218-000 | 10-36 |
| 76218-001 | 10-36A |
| 76219-000 | 54-1 |
| 76219-001 | 54-1A |
| 76221-000 | 31-5B |
| 76239-000 | 9-19 |
| 76255-004 | 7-2 |
| 76256-000 | 7-23 |
| 76261-000 | 9-66 |
| 76261-001 | 9-66A |
| 76262-000 | 9-67 |
| 76264-000 | 14-23 |
| 76264-000 | 14-24 |
| 76265-000 | 14-27 |
| 76266-000 | 14-27A |
| 76267-000 | 14-25 |
| 76267-001 | 14-25A |
| 76270-000 | 14-28 |
| 76270-001 | 14-28A |
| 76272-002 | 14-29 |
| 76272-003 | 14-29A |

| Part Number | Figure and Index No. |
|---|---|
| 76279-000 | 9-61 |
| 76297-000 | 7-33 |
| 76297-001 | 7-33A |
| 76342-000 | 34-11 |
| 76343-000 | 34-12 |
| 76347-000 | 34-9 |
| 76349-000 | 34-10 |
| 76351-002 | 34-13 |
| 76351-003 | 34-14 |
| 76356-002 | 32-11 |
| 76365-000 | 9-20 |
| 76462-000 | 31-43 |
| 76467-000 | 7-13 |
| 76467-000 | 9-47 |
| 76467-002 | 9-49 |
| 76467-003 | 9-48 |
| 76467-004 | 9-8 |
| 76468-000 | 9-17 |
| 76468-002 | 9-18 |
| 76468-003 | 9-18A |
| 76470-004 | 7-1 |
| 76470-004 | 8-1 |
| 76470-004 | 9-1 |
| 76470-004 | 10-1 |
| 76470-004 | 11-1 |
| 76470-005 | 7-1 |
| 76470-005 | 8-1 |
| 76470-005 | 9-1 |
| 76470-005 | 10-1 |
| 76470-005 | 11-1 |
| 76475-000 | 7-36 |
| 76476-000 | 7-22 |
| 76489-002 | 8-16 |
| 76490-002 | 10-15 |
| 76490-003 | 10-15A |
| 76497-006 | 12-76 |
| 78023-000 | 32-25 |
| 78023-000 | 35-18 |
| 78033-000 | 23-23 |
| 78112-005 | 7-20 |
| 78140-039 | 63-2 |
| 78140-046 | 62-36A |
| 78140-047 | 62-36 |
| 78140-080 | 62-51 |
| 78735-002 | 31-68 |
| 78736-002 | 57-24 |
| 78736-003 | 57-24A |
| 78738-002 | 23-35 |
| 78738-003 | 23-35A |
| 78740-002 | 68-10 |
| 79004-003 | 70-6A |
| 79004-003 | 70-10A |
| 79035-000 | 55-16 |
| 79071-000 | 20-23 |
| 79072-000 | 20-22 |
| 79108-008 | 19-1 |
| 79110-002 | 19-10 |
| 79110-002 | 20-1 |

| Part Number | Figure and Index No. |
|---|---|
| 79110-003 | 20-24 |
| 79151-002 | 60-41 |
| 79161-000 | 9-16 |
| 79174-000 | 2-66 |
| 79174-004 | 2-67 |
| 79177-000 | 32-29 |
| 79177-000 | 35-19A |
| 79205-000 | 60-40A |
| 79207-000 | 34-37 |
| 79229-000 | 34-16 |
| 79230-000 | 34-17 |
| 79234-000 | 9-39 |
| 79235-000 | 34-18 |
| 79236-005 | 33-4 |
| 79236-016 | 33-2 |
| 79258-000 | 10-59 |
| 79258-001 | 10-59A |
| 79264-000 | 55-26 |
| 79266-000 | 55-19 |
| 79267-000 | 12-43 |
| 79268-000 | 17-18 |
| 79272-000 | 12-16 |
| 79277-002 | 15-45 |
| 79277-003 | 15-45A |
| 79280-000 | 55-14 |
| 79281-000 | 55-18 |
| 79282-000 | 55-12 |
| 79285-000 | 55-15 |
| 79286-000 | 55-17 |
| 79287-000 | 55-13 |
| 79290-000 | 55-1 |
| 79293-005 | 55-33 |
| 79303-000 | 55-11 |
| 79319-000 | 10-61 |
| 79332-000 | 8-30 |
| 79399-003 | 37-2 |
| 79399-005 | 37-2 |
| 79404-000 | 31-65 |
| 79424-000 | 8-30A |
| 79430-000 | 29-11 |
| 79442-000 | 34-25 |
| 79445-000 | 31-32 |
| 79452-000 | 13-4 |
| 79456-000 | 31-64 |
| 79475-007 | 13-19 |
| 79475-008 | 13-20 |
| 79475-034 | 13-46 |
| 79475-095 | 13-17 |
| 79475-096 | 13-18 |
| 79475-103 | 13-21 |
| 79515-002 | 13-22 |
| 79515-004 | 13-27 |
| 79515-006 | 13-28 |
| 79515-007 | 13-31 |
| 79515-008 | 13-32 |
| 79515-013 | 13-24 |
| 79515-015 | 13-33 |
| 79515-073 | 13-23 |

# NUMERICAL INDEX


| Part Number | Figure and Index No. |
|---|---|
| 79530-002 | 13-34 |
| 79532-002 | 13-37 |
| 79539-002 | 32-7 |
| 79539-002 | 34-3 |
| 79539-003 | 32-7A |
| 79539-003 | 34-3A |
| 79545-015 | 13-10 |
| 79545-019 | 13-10 |
| 79545-020 | 13-10 |
| 79545-021 | 13-10 |
| 79545-022 | 13-10 |
| 79553-000 | 8-7 |
| 79553-001 | 8-7A |
| 79555-000 | 32-26 |
| 79555-000 | 34-45 |
| 79555-000 | 35-22 |
| 79555-002 | 34-48 |
| 79555-002 | 35-23 |
| 79555-011 | 34-49 |
| 79555-014 | 32-26A |
| 79555-014 | 34-45A |
| 79557-002 | 14-5 |
| 79558-002 | 56-10B |
| 79561-004 | 9-7 |
| 79561-007 | 9-6 |
| 79561-008 | 9-5 |
| 79561-009 | 9-3 |
| 79561-010 | 9-4 |
| 79561-027 | 7-13A |
| 79561-027 | 9-2 |
| 79561-033 | 7-14 |
| 79562-003 | 14-22 |
| 79563-000 | 7-19A |
| 79563-003 | 7-19 |
| 79569-000 | 7-15 |
| 79572-002 | 14-17 |
| 79573-003 | 7-10 |
| 79576-003 | 7-21 |
| 79577-004 | 7-3 |
| 79578-000 | 7-27 |
| 79580-000 | 7-34 |
| 79580-001 | 7-34A |
| 79581-000 | 7-35 |
| 79582-002 | 7-25 |
| 79584-009 | 56-8 |
| 79585-002 | 7-26 |
| 79585-003 | 7-26 |
| 79595-020 | 62-33 |
| 79595-022 | 59-59D |
| 79595-025 | 62-33A |
| 79600-000 | 36-10C |
| 79615-002 | 54-46 |
| 79615-003 | 54-46A |
| 79636-004 | 69-2 |
| 79639-002 | 9-50 |
| 79647-002 | 13-25 |
| 79650-002 | 36-10B |
| 79653-095 | 62-18 |
| 79653-125 | 59-10 |
| 79653-210 | 62-49 |
| 79653-211 | 62-49A |
| 79653-212 | 62-37 |
| 79653-213 | 62-37A |
| 79653-215 | 59-62 |
| 79653-245 | 63-3 |
| 79653-261 | 60A-11 |
| 79653-262 | 60A-12 |
| 79739-002 | 8-15 |
| 79739-003 | 8-15A |
| 79781-002 | 33-26 |
| 79785-002 | 31-87 |
| 79795-002 | 8-32 |
| 79795-003 | 8-10 |
| 79795-004 | 8-9 |
| 79795-012 | 8-32 |
| 79828-003 | 33-20 |
| 79828-012 | 33-17 |
| 79828-014 | 33-18A |
| 79836-004 | 31-30 |
| 79839-003 | 57-19 |
| 79840-004 | 57-20 |
| 79849-009 | 31-29 |
| 79863-003 | 8-33 |
| 79880-003 | 32-27 |
| 79880-003 | 35-21 |
| 79886-003 | 56-14 |
| 79886-007 | 56-16 |
| 79886-011 | 56-13 |
| 79886-012 | 56-13 |
| 79890-041 | 26-11 |
| 79890-042 | 26-11A |
| 79890-043 | 26-12 |
| 79890-044 | 26-12A |
| 79890-045 | 26-13 |
| 79890-046 | 26-13A |
| 79892-002 | 26-18 |
| 79892-003 | 26-18A |
| 79892-004 | 26-19 |
| 79892-005 | 26-19A |
| 79892-009 | 26-20A |
| 79892-010 | 26-20 |
| 80032-069 | 45-57 |
| 82227-002 | 31-84A |
| 82695-024 | 38-2A |
| 82732-076 | 49-49 |
| 82732-076 | 52-34 |
| 82732-102 | 41-15A |
| 82732-103 | 41-13B |
| 82940-002 | 52-3J |
| 82940-003 | 52-3H |
| 82974-008 | 52-3C |
| 82980-007 | 52-2 |
| 83222-004 | 62-54 |
| 83349-004 | 40-4 |
| 83349-012 | 40-3 |
| 83349-014 | 40-4A |
| 83349-015 | 40-4B |
| 83350-003 | 43-16 |
| 83350-004 | 43-1 |
| 83350-012 | 43-17 |
| 83350-017 | 43-16 |
| 83350-018 | 43-1 |
| 83365-002 | 13-3 |
| 83393-005 | 14-43A |
| 83396-002 | 31-15 |
| 83396-002 | 59-15 |
| 83396-003 | 31-15 |
| 83396-003 | 59-15 |
| 83744-143 | 39-15 |
| 83744-144 | 39-14 |
| 83744-265 | 39-60 |
| 83744-267 | 39-50 |
| 83744-270 | 39-56 |
| 83744-270 | 39-59 |
| 83744-272 | 39-61 |
| 83744-273 | 39-62 |
| 83744-274 | 39-52 |
| 83744-275 | 39-54 |
| 83932-007 | 36-27A |
| 84013-026 | 37-19 |
| 84013-028 | 37-20 |
| 84013-082 | 38-13 |
| 84013-084 | 38-4 |
| 84013-087 | 38-6 |
| 84264-002 | 59-19 |
| 84265-002 | 61-15 |
| 84265-009 | 61-15 |
| 84266-005 | 56-21 |
| 84266-007 | 56-22 |
| 84266-008 | 56-19 |
| 84266-019 | 56-24 |
| 84267-002 | 58-3 |
| 84276-002 | 7-7 |
| 84276-003 | 7-8 |
| 84277-002 | 59-16 |
| 84277-003 | 31-16 |
| 84277-003 | 59-26 |
| 84277-004 | 31-5 |
| 84277-005 | 31-2 |
| 84277-006 | 31-12 |
| 84277-007 | 31-10 |
| 84277-008 | 31-11 |
| 84277-009 | 31-8 |
| 84277-010 | 31-1 |
| 84277-011 | 31-9 |
| 84277-013 | 13-58 |
| 84277-014 | 13-13 |
| 84277-014 | 13-59 |
| 84277-015 | 31-4 |
| 84277-016 | 31-3 |
| 84277-017 | 31-10B |
| 84277-018 | 31-2F |
| 84277-019 | 31-7 |
| 84277-020 | 31-6 |
| 84277-021 | 31-14 |
| 84277-022 | 31-13 |
| 84277-023 | 59-16 |
| 84277-024 | 31-9A |
| 84277-026 | 31-16 |
| 84277-026 | 59-26 |
| 84277-062 | 31-28 |
| 84277-073 | 31-17 |
| 84277-086 | 13-11 |
| 84277-092 | 31-2 |
| 84277-093 | 31-10 |
| 84277-094 | 31-9 |
| 84277-095 | 13-13 |
| 84277-095 | 13-59 |
| 84277-096 | 31-9A |
| 84277-152 | 31-11 |
| 84277-153 | 31-11 |
| 84277-154 | 31-11 |
| 84277-155 | 31-11 |
| 84277-160 | 13-58 |
| 84277-161 | 13-58 |
| 84277-162 | 13-58 |
| 84277-163 | 13-58 |
| 84277-199 | 31-12 |
| 84277-200 | 31-5 |
| 84277-209 | 31-28 |
| 84277-210 | 31-11 |
| 84278-012 | 31-28A |
| 84290-006 | 14-4 |
| 84290-007 | 14-4A |
| 84290-012 | 14-1 |
| 84290-013 | 14-2 |
| 84316-002 | 63-8B |
| 84431-003 | 63-5 |
| 84522-003 | 45-71 |
| 84549-004 | 52-38 |
| 84622-004 | 61-16 |
| 84622-008 | 61-7 |
| 84622-009 | 61-8 |
| 84622-010 | 61-9 |
| 84622-012 | 61-11 |
| 84622-013 | 61-10 |
| 84622-017 | 60-36 |
| 84622-025 | 60-37 |
| 84622-034 | 61-2 |
| 84622-035 | 61-3 |
| 84622-064 | 61-17 |
| 84622-068 | 61-6 |
| 84622-084 | 61-4 |
| 84622-085 | 61-5 |
| 84622-090 | 60-35 |
| 84622-093 | 55-31C |
| 84622-093 | 60-34 |
| 84622-096 | 61-11 |
| 84622-096 | 61-19 |
| 84622-099 | 61-18 |
| 84652-002 | 40-55 |
| 84967-174 | 31-26 |

# NUMERICAL INDEX


| Part Number | Figure and Index No. |
|---|---|
| 84967-175 | 31-51A |
| 85012-072 | 19-21 |
| 85012-101 | 40-49 |
| 85061-002 | 19-39 |
| 85187-002 | 68-11 |
| 85189-006 | 52-3A |
| 85192-002 | 14-18 |
| 85192-003 | 14-18A |
| 85192-004 | 14-19 |
| 85192-005 | 14-19A |
| 85210-006 | 31-2A |
| 85210-006 | 31-10A |
| 85210-070 | 31-2D |
| 85238-015 | 43-3A |
| 85238-017 | 43-3 |
| 85238-019 | 43-20 |
| 85238-021 | 43-20A |
| 85292-007 | 52-1 |
| 85292-009 | 52-1 |
| 85299-005 | 59-64 |
| 85301-006 | 59-71D |
| 85304-004 | 60-25 |
| 85305-002 | 60-42A |
| 85305-003 | 60-42E |
| 85311-004 | 31-83 |
| 85311-004 | 59-25 |
| 85326-007 | 43-4 |
| 85326-008 | 43-4 |
| 85328-003 | 60-43 |
| 85342-002 | 40-33 |
| 85358-002 | 59-72 |
| 85358-005 | 59-71 |
| 85359-002 | 59-70 |
| 85365-009 | 31-20 |
| 85365-010 | 31-18 |
| 85365-011 | 31-19 |
| 85372-003 | 36-9 |
| 85372-003 | 60-9 |
| 85372-005 | 36-9 |
| 85372-005 | 60A-14 |
| 85372-009 | 60A-14 |
| 85374-002 | 60-2 |
| 85375-003 | 36-16 |
| 85375-003 | 60-1 |
| 85375-004 | 60-1 |
| 85375-006 | 60-1 |
| 85376-002 | 39-37B |
| 85376-003 | 39-37B |
| 85377-002 | 39-37 |
| 85378-002 | 39-36 |
| 85378-002 | 59-66 |
| 85378-003 | 39-36A |
| 85378-004 | 59-66 |
| 85390-002 | 59-27 |
| 85402-002 | 2-12 |
| 85402-002 | 62-56 |
| 85402-003 | 2-12A |
| 85402-003 | 62-56A |

| Part Number | Figure and Index No. |
|---|---|
| 85402-008 | 62-60 |
| 85402-009 | 62-59 |
| 85402-010 | 62-58A |
| 85402-011 | 62-57A |
| 85402-014 | 62-66 |
| 85402-015 | 62-66A |
| 85402-016 | 62-58 |
| 85402-017 | 62-57 |
| 85412-002 | 63-7 |
| 85413-002 | 63-24 |
| 85414-002 | 63-26 |
| 85415-002 | 63-25 |
| 85416-002 | 12-55 |
| 85416-003 | 12-55 |
| 85417-002 | 12-54 |
| 85417-003 | 12-54 |
| 85418-002 | 62-32 |
| 85418-003 | 63-6 |
| 85418-004 | 63-3 |
| 85419-003 | 64-10 |
| 85419-004 | 64-11 |
| 85419-005 | 64-12 |
| 85424-002 | 65-12 |
| 85425-003 | 59-80 |
| 85425-004 | 59-28 |
| 85425-005 | 59-29 |
| 85425-006 | 62-48 |
| 85425-007 | 62-48A |
| 85427-003 | 60A-45 |
| 85428-008 | 59-76 |
| 85428-009 | 59-76A |
| 85429-002 | 61-1 |
| 85429-003 | 61-1 |
| 85429-004 | 61-1 |
| 85429-005 | 61-1 |
| 85429-006 | 61-1 |
| 85429-007 | 61-1 |
| 85430-002 | 59-89 |
| 85432-002 | 65-6 |
| 85436-002 | 14-26 |
| 85436-004 | 14-20 |
| 85436-005 | 14-30A |
| 85436-007 | 14-31 |
| 85436-008 | 14-30 |
| 85470-002 | 42-10 |
| 85470-003 | 42-10A |
| 85472-010 | 40-9A |
| 85472-012 | 40-9 |
| 85474-019 | 40-40 |
| 85475-008 | 43-5 |
| 85475-009 | 43-9 |
| 85475-011 | 43-10 |
| 85475-012 | 43-6 |
| 85475-013 | 43-12 |
| 85475-014 | 43-8 |
| 85475-015 | 43-7 |
| 85475-016 | 43-11 |
| 85475-021 | 43-10A |

| Part Number | Figure and Index No. |
|---|---|
| 85475-022 | 43-6A |
| 85475-023 | 43-12A |
| 85475-024 | 43-8A |
| 85475-025 | 43-7A |
| 85475-026 | 43-11A |
| 85477-002 | 41-5 |
| 85477-005 | 41-6 |
| 85477-011 | 41-18 |
| 85479-003 | 40-14 |
| 85481-002 | 43-19 |
| 85481-009 | 43-19A |
| 85481-010 | 43-15A |
| 85481-011 | 43-13 |
| 85485-002 | 42-9 |
| 85485-004 | 42-8 |
| 85485-014 | 42-3 |
| 85485-015 | 42-4 |
| 85486-002 | 42-2 |
| 85486-003 | 42-1 |
| 85487-002 | 42-6 |
| 85487-003 | 42-5 |
| 85488-002 | 43-21 |
| 85488-003 | 43-21A |
| 85488-008 | 43-21 |
| 85488-010 | 43-21A |
| 85489-010 | 40-40A |
| 85489-011 | 40-40B |
| 85490-002 | 40-16 |
| 85491-002 | 38-7 |
| 85492-009 | 8-47 |
| 85492-010 | 8-48 |
| 85492-021 | 8-47 |
| 85532-003 | 56-9 |
| 86062-056 | 19-16 |
| 86062-094 | 40-9C |
| 86517-002 | 4-43 |
| 86517-003 | 4-45 |
| 86652-008 | 71-5 |
| 86700-048 | 19-36 |
| 86875-004 | 45-64 |
| 87241-010 | 47-10 |
| 87332-002 | 34-34 |
| 87334-002 | 13-69 |
| 87341-002 | 15-44 |
| 87341-005 | 13-68 |
| 87451-004 | 36-25 |
| 87451-005 | 36-25A |
| 87452-006 | 31-85 |
| 87466-002 | 36-25C |
| 87468-002 | 19-31 |
| 87477-002 | 45-6 |
| 87485-006 | 59-86A |
| 87499-003 | 57-25 |
| 87702-007 | 36-27 |
| 87772-007 | 38-10A |
| 87777-008 | 38-15 |
| 87777-045 | 38-15A |
| 89023-010 | 35-16 |

| Part Number | Figure and Index No. |
|---|---|
| 89023-013 | 32-24 |
| 89023-013 | 35-17 |
| 89023-016 | 32-23 |
| 89023-016 | 34-43 |
| 89023-017 | 32-23A |
| 89023-017 | 34-43A |
| 89026-002 | 32-1 |
| 89026-002 | 34-1 |
| 89026-003 | 32-1A |
| 89026-003 | 34-1A |
| 89026-006 | 32-2 |
| 89026-006 | 34-2 |
| 89026-007 | 32-2A |
| 89026-007 | 34-2A |
| 89027-002 | 32-38 |
| 89027-002 | 35-1A |
| 89027-003 | 32-38A |
| 89027-003 | 35-1 |
| 89027-004 | 35-2A |
| 89027-005 | 35-2 |
| 89027-006 | 35-3 |
| 89028-002 | 32-17 |
| 89028-002 | 35-35 |
| 89028-003 | 32-19 |
| 89028-003 | 35-36 |
| 89028-004 | 32-18 |
| 89028-004 | 35-40 |
| 89046-008 | 32-3 |
| 89251-002 | 8-31 |
| 89258-002 | 59-53B |
| 89258-008 | 59-52 |
| 89258-009 | 59-52 |
| 89265-002 | 13-60 |
| 89276-011 | 60-4 |
| 89276-012 | 60-7 |
| 89276-013 | 60-6 |
| 89276-014 | 60-8 |
| 89276-015 | 60-5 |
| 89276-015 | 60A-3 |
| 89276-019 | 60-6 |
| 89276-020 | 60-7 |
| 89276-024 | 60A-10 |
| 89276-025 | 60A-8 |
| 89276-026 | 60A-9 |
| 89276-027 | 60A-7 |
| 89276-028 | 60A-5 |
| 89276-029 | 60A-6 |
| 89276-030 | 60A-4 |
| 89276-035 | 60A-8A |
| 89300-007 | 8-46 |
| 89305-022 | 31-63 |
| 89305-023 | 36-26 |
| 89305-026 | 31-63 |
| 89305-027 | 36-26 |
| 89308-000 | 40-18A |
| 89344-006 | 63-21 |
| 89452-004 | 60-10 |
| 89452-018 | 60-11 |

# NUMERICAL INDEX


| Part Number | Figure and Index No. |
|---|---|
| 89452-018 | 60A-21 |
| 89452-021 | 60-15 |
| 89452-021 | 60A-22 |
| 89452-025 | 60-19 |
| 89452-025 | 60A-19 |
| 89452-026 | 60-16 |
| 89452-026 | 60A-18 |
| 89452-032 | 60-13 |
| 89452-033 | 60-14 |
| 89452-034 | 60-18 |
| 89452-034 | 60A-17 |
| 89452-035 | 60-12 |
| 89452-035 | 60A-16 |
| 89452-036 | 60-17 |
| 89452-036 | 60A-20 |
| 89452-051 | 60A-18A |
| 89567-002 | 31-5A |
| 89567-002 | 31-12A |
| 89567-016 | 31-5A |
| 89567-016 | 31-12A |
| 89803-005 | 63-18 |
| 89803-006 | 63-16 |
| 89840-009 | 59-69 |
| 89875-002 | 59-23 |
| 89875-004 | 59-23A |
| 89908-002 | 31-2B |
| 89908-003 | 59-24 |
| 89977-007 | 32-8 |
| 89979-011 | 34-52 |
| 90797-002 | 45-19 |
| 95061-106 | 34-21 |
| 95061-109 | 32-9B |
| 95061-151 | 56-11 |
| 95061-161 | 34-20 |
| 95061-172 | 32-14B |
| 95094-000 | 3-23 |
| 95153-101 | 39-18 |
| 95153-158 | 39-18 |
| 95227-003 | 59-20 |
| 95228-003 | 59-18 |
| 95229-005 | 59-17 |
| 95479-000 | 43-22 |
| 95636-000 | 4-30 |
| 95636-001 | 4-30A |
| 95639-002 | 3-2 |
| 95639-003 | 3-2A |
| 96143-010 | 39-9C |
| 96143-011 | 39-8 |
| 96352-003 | 2-58B |
| 96352-003 | 2-59B |
| 96352-003 | 2-61A |
| 96392-010 | 39-1 |
| 96392-012 | 39-1 |
| 96684-000 | 10-57 |
| 96809-002 | 34-53 |
| 96809-002 | 35-30 |
| 96812-002 | 34-55 |
| 96812-002 | 35-27 |

| Part Number | Figure and Index No. |
|---|---|
| 96817-000 | 34-51 |
| 96817-000 | 35-24 |
| 96818-000 | 35-29 |
| 96819-000 | 34-50 |
| 96819-000 | 35-25 |
| 96819-001 | 34-50A |
| 96819-001 | 35-25A |
| 96820-000 | 34-54 |
| 96820-000 | 35-26 |
| 96820-001 | 34-54A |
| 96820-001 | 35-26A |
| 96830-001 | 34-57 |
| 96830-001 | 35-28 |
| 96887-000 | 10-35A |
| 96887-002 | 10-35 |
| 96890-000 | 10-21 |
| 96890-001 | 10-21A |
| 96908-000 | 35-54 |
| 96908-000 | 35-58 |
| 96926-000 | 2-25 |
| 96926-000 | 2-41 |
| 96927-000 | 2-42 |
| 98044-070 | 46-9 |
| 98044-071 | 46-10 |
| 98044-072 | 46-11 |
| 99002-009 | 36-6 |
| 99015-000 | 54-50 |
| 99031-000 | 62-16 |
| 99032-002 | 62-19 |
| 99045-000 | 10-29 |
| 99075-000 | 35-12 |
| 99077-012 | 35-5 |
| 99077-013 | 35-5A |
| 99077-016 | 35-4 |
| 99077-017 | 35-4A |
| 99080-000 | 56-48 |
| 99094-004 | 43-14 |
| 99096-002 | 43-15 |
| 99109-015 | 56-13B |
| 99121-000 | 72-77 |
| 99123-000 | 10-28 |
| 99127-004 | 10-24 |
| 99129-003 | 10-27 |
| 99140-000 | 33-25 |
| 99141-003 | 33-24 |
| 99143-000 | 33-9 |
| 99181-003 | 31-61 |
| 99184-002 | 31-71 |
| 99184-005 | 31-72 |
| 99184-007 | 31-73 |
| 99184-008 | 31-74 |
| 99240-000 | 33-16 |
| 99252-010 | 33-18 |
| 99253-000 | 32-21 |
| 99253-000 | 35-38 |
| 99254-002 | 32-22 |
| 99254-002 | 35-39 |
| 99263-000 | 58-6 |

| Part Number | Figure and Index No. |
|---|---|
| 99271-000 | 58-10 |
| 99272-000 | 12-70 |
| 99273-000 | 12-71 |
| 99275-002 | 58-7 |
| 99275-002 | 58-11 |
| 99275-004 | 58-16 |
| 99278-003 | 12-72 |
| 99280-000 | 12-69 |
| 99280-001 | 12-69A |
| 99387-005 | 58-2 |
| 99387-006 | 58-5 |
| 99411-000 | 54-3A |
| 99412-000 | 54-3B |
| 99412-001 | 54-3C |
| 99417-000 | 10-39 |
| 99417-000 | 10-40 |
| 99458-000 | 31-52 |
| 99466-024 | 7-5 |
| 99466-024 | 12-1 |
| 99467-003 | 12-12 |
| 99468-003 | 12-2 |
| 99469-003 | 12-6 |
| 99470-000 | 12-3 |
| 99470-001 | 12-3A |
| 99471-002 | 12-5 |
| 99471-003 | 12-5A |
| 99480-003 | 36-1 |
| 99487-000 | 12-62 |
| 99487-001 | 12-62A |
| 99488-000 | 12-68 |
| 99495-000 | 58-8 |
| 99496-000 | 12-73 |
| 99539-000 | 57-21 |
| 99545-000 | 12-66 |
| 99549-008 | 12-59 |
| 99549-009 | 12-59A |
| 99549-010 | 12-75 |
| 99549-016 | 12-67 |
| 99550-002 | 57-22 |
| 99552-000 | 12-77A |
| 99552-002 | 12-77 |
| 99555-000 | 12-64 |
| 99557-004 | 58-12 |
| 99558-000 | 12-65 |
| 99559-000 | 12-60 |
| 99559-001 | 12-60A |
| 99561-000 | 12-74 |
| 99561-000 | 58-15 |
| 99568-004 | 41-8 |
| 99569-003 | 58-24 |
| 99572-006 | 58-23 |
| 99609-000 | 12-61 |
| 99610-000 | 70-4A |
| 99610-002 | 70-5A |
| 99615-000 | 12-79 |
| 99615-001 | 12-79A |
| 99619-007 | 15-14 |
| 99621-002 | 15-15 |

| Part Number | Figure and Index No. |
|---|---|
| 99626-000 | 12-63 |
| 99630-000 | 56-47 |
| 99631-000 | 12-80 |
| 99633-000 | 55-25 |
| 99633-000 | 57-8 |
| 99635-009 | 31-60 |
| 99640-008 | 57-1 |
| 99640-009 | 57-2 |
| 99641-000 | 55-23 |
| 99641-000 | 57-6 |
| 99642-004 | 55-20 |
| 99642-004 | 57-3 |
| 99644-000 | 57-23 |
| 99650-000 | 57-13 |
| 99661-000 | 57-15 |
| 99690-000 | 9-70 |
| 99690-001 | 9-70A |
| 99691-000 | 9-73 |
| 99691-001 | 9-73A |
| 99692-000 | 9-71 |
| 99692-001 | 9-71A |
| 99693-000 | 9-74 |
| 99699-000 | 11-17 |
| 99717-000 | 65-4A |
| 99746-003 | 57-26 |
| 99754-002 | 46-4 |
| 99756-000 | 46-4A |
| 99803-007 | 15-18 |
| 99813-002 | 12-42 |
| 99818-000 | 31-101 |
| 99835-004 | 8-18B |
| 99853-000 | 58-41 |
| 99854-002 | 58-37 |
| 99855-003 | 58-1 |
| 99856-000 | 50-64 |
| 99862-000 | 65-3 |
| 99867-005 | 58-43 |
| 99868-000 | 62-19 |
| 99887-007 | 68-8 |
| 99892-000 | 56-11A |
| 99983-100 | 60-48 |
| 99983-100 | 60A-35 |
| 99983-101 | 60-47 |
| 99983-101 | 60A-35A |
| 99983-107 | 60-52 |
| 99983-143 | 60-46 |
| 99983-143 | 60A-34A |
| 99983-178 | 60-45 |
| 99983-184 | 60A-34 |
| 100571-002 | 52-3 |
| 100572-002 | 52-1 |
| 100586-008 | 13-73 |
| 100586-009 | 13-8 |
| 100632-002 | 31-84 |
| 100700-012 | 64-1B |
| 100872-002 | 31-88 |
| 100872-003 | 31-88A |
| 100873-002 | 31-89 |

# NUMERICAL INDEX


| Part Number | Figure and Index No. |
|---|---|
| 100873-002 | 31-95 |
| 100873-003 | 31-92 |
| 100873-004 | 31-93 |
| 100873-005 | 31-91 |
| 100873-006 | 31-90 |
| 100873-007 | 31-92 |
| 100873-011 | 31-93 |
| 100880-005 | 31-94 |
| 100880-005 | 31-99 |
| 101000-003 | 63-5 |
| 101103-002 | 56-13A |
| 101105-002 | 52-1D |
| 101117-006 | 66-16A |
| 101117-016 | 66-16 |
| 101118-003 | 52-1D |
| 101173-007 | 56-1 |
| 101204-006 | 8-47 |
| 101204-009 | 8-48 |
| 101265-005 | 70-2A |
| 101265-006 | 70-4A |
| 101266-004 | 70-2B |
| 101266-005 | 70-4A |
| 101266-005 | 70-9A |
| 101271-005 | 8-48 |
| 101271-005 | 36-23 |
| 101271-008 | 8-47 |
| 101271-008 | 36-24 |
| 101284-002 | 65-5 |
| 101284-003 | 65-6A |
| 101291-003 | 38-15B |
| 101318-003 | 71-5 |
| 101324-003 | 71-4 |
| 101328-002 | 15-45 |
| 101328-003 | 15-45A |
| 101414-002 | 8-8 |
| 101425-002 | 69-11 |
| 101753-003 | 66-5 |
| 101771-005 | 70-4A |
| 101771-021 | 70-16A |
| 101782-004 | 66-6A |
| 101787-004 | 7-16B |
| 101802-004 | 66-1 |
| 101802-005 | 66-3 |
| 101806-002 | 66-4 |
| 101821-002 | 66-21 |
| 101900-002 | 66-22 |
| 101901-114 | 71-5 |
| 101902-100 | 59-60 |
| 101902-100 | 62-34 |
| 101902-104 | 62-36 |
| 101902-104 | 62-36A |
| 101902-104 | 62-38 |
| 101902-107 | 60A-25 |
| 101902-110 | 59-76 |
| 101902-111 | 59-76A |
| 101902-112 | 59-79 |
| 101902-116 | 59-80 |
| 101902-119 | 62-35 |

| Part Number | Figure and Index No. |
|---|---|
| 101906-003 | 36-16 |
| 101906-003 | 60A-1 |
| 101906-006 | 60A-1 |
| 101907-002 | 59-86 |
| 101950-003 | 8-49 |
| 101952-002 | 66-7 |
| 101959-002 | 8-8 |
| 101961-002 | 8-18B |
| 101961-002 | 71-4 |
| 101962-002 | 8-5A |
| 101965-002 | 7-16 |
| 101965-003 | 7-16A |
| 101966-002 | 31-28 |
| 101969-002 | 66-11A |
| 101970-002 | 66-12B |
| 101974-002 | 66-12A |
| 101975-002 | 8-5B |
| 101975-003 | 8-5C |
| 101980-002 | 8-5D |
| 101980-003 | 8-5E |
| 101983-002 | 71-1 |
| 101984-002 | 66-10C |
| 101985-003 | 66-11B |
| 102328-007 | 70-8A |
| 102641-118 | 39-45 |
| 102641-119 | 39-48 |
| 104138-002 | 62-52 |
| 104176-002 | 62-53 |
| 104211-012 | 35-49 |
| 104211-013 | 35-49 |
| 104211-014 | 32-33 |
| 104211-015 | 32-33A |
| 104461-002 | 63-22 |
| 104462-003 | 64-10 |
| 104462-004 | 64-11 |
| 104462-005 | 64-12 |
| 104463-002 | 62-32 |
| 104487-003 | 70-3A |
| 104487-004 | 70-3C |
| 104487-005 | 70-3B |
| 104530-005 | 31-98 |
| 104531-002 | 31-96 |
| 104532-002 | 31-97 |
| 104606-002 | 40-40 |
| 104606-006 | 40-40A |
| 104606-021 | 40-40B |
| 104607-002 | 40-41 |
| 104608-002 | 40-42 |
| 104628-002 | 41-18 |
| 104687-002 | 52-1B |
| 104721-002 | 4-20B |
| 104884-002 | 8-18C |
| 104900-002 | 35-20 |
| 104901-002 | 32-30 |
| 104902-002 | 32-6 |
| 104903-002 | 35-14 |
| 104906-002 | 32-20 |
| 104906-002 | 35-37 |

| Part Number | Figure and Index No. |
|---|---|
| 68426-000 | 16-1 |
| 151-300 | 40-5 |
| 187-625 | 20-20 |
| 189-549 | 40-23A |
| 189-625 | 56-28 |
| 189-625 | 62-47 |
| 189-625 | 63-23 |
| 189-757 | 14-10B |
| 189-780 | 37-29 |
| 197-511 | 56-45 |
| 400-002 | 34-24 |
| 400-002 | 45-35A |
| 400-002 | 59-10A |
| 400-002 | 63-3A |
| 400-003 | 15-25 |
| 400-003 | 15-33 |
| 400-003 | 16-25 |
| 400-003 | 23-16 |
| 400-004 | 16-26 |
| 400-004 | 26-28 |
| 400-004 | 35-56 |
| 400-004 | 49-42 |
| 400-004 | 58-39 |
| 400-004 | 59-88 |
| 400-008 | 48-45 |
| 400-011 | 49-4 |
| 400-056 | 15-23 |
| 400-056 | 44-38 |
| 400-056 | 52-36 |
| 400-058 | 19-23 |
| 400-059 | 41-13 |
| 400-060 | 41-10A |
| 400-061 | 44-32 |
| 400-103 | 41-12A |
| 400-113 | 13-30 |
| 400-113 | 28-15 |
| 400-155 | 48-68A |
| 400-165 | 23-37 |
| 400-166 | 23-47 |
| 400-302 | 23-26 |
| 400-437 | 32-9A |
| 400-437 | 50-26 |
| 400-437 | 50-31 |
| 400-437 | 50-60 |
| 400-438 | 12-52 |
| 400-438 | 18-9A |
| 400-438 | 20-34 |
| 400-438 | 49-41 |
| 400-438 | 50-28 |
| 400-438 | 53-16 |
| 400-438 | 64-14 |
| 400-440 | 19-46 |
| 400-440 | 49-39 |
| 400-440 | 58-32 |
| 400-441 | 49-39A |
| 400-441 | 64-2A |

| Part Number | Figure and Index No. |
|---|---|
| 400-443 | 29-12A |
| 400-443 | 49-35 |
| 400-444 | 2-29 |
| 400-444 | 29-23 |
| 400-446 | 50-66 |
| 400-448 | 19-29A |
| 400-449 | 26-34 |
| 400-450 | 15-24 |
| 400-450 | 19-20 |
| 400-450 | 50-59 |
| 400-456 | 53-18 |
| 400-460 | 41-15 |
| 400-464 | 40-9B |
| 400-496 | 63-8 |
| 400-616 | 56-30 |
| 400-652 | 49-36 |
| 400-653 | 49-37 |
| 400-653 | 49-38 |
| 400-653 | 52-35 |
| 400-665 | 13-38 |
| 400-668 | 13-24A |
| 400-672 | 51-7 |
| 400-672 | 53-17 |
| 400-673 | 49-44 |
| 400-674 | 44-21 |
| 400-674 | 48-53 |
| 400-678 | 48-61F |
| 400-680 | 49-48 |
| 400-861 | 58-18 |
| 400-861 | 58-19 |
| 400-861 | 58-30 |
| 400-861 | 58-35 |
| 400-862 | 13-63 |
| 400-864 | 32-35A |
| 400-876 | 28-16 |
| 400-907 | 26-32 |
| 400-907 | 26-33 |
| 400-907 | 32-14 |
| 400-916 | 32-32 |
| 400-916 | 35-45 |
| 400-917 | 32-32A |
| 401-187 | 35-55 |
| 401-187 | 35-59 |
| 401-188 | 48-40 |
| 401-188 | 48-54 |
| 401-195 | 20-25 |
| 401-266 | 7-39C |
| 401-266 | 10-67 |
| 401-266 | 17-11 |
| 401-266 | 47-19A |
| 401-266 | 48-43 |
| 401-266 | 49-54 |
| 401-266 | 50-27 |
| 401-269 | 10-66 |
| 401-269 | 15-43 |
| 401-269 | 32-35 |
| 401-269 | 32-35A |
| 401-269 | 32-37 |

# NUMERICAL INDEX


| Part Number | Figure and Index No. |
|---|---|
| 401-269 | 50-29 |
| 401-269 | 52-11 |
| 401-269 | 58-17 |
| 401-270 | 2-28 |
| 401-270 | 34-56 |
| 401-270 | 35-26B |
| 401-270 | 48-64 |
| 401-273 | 20-33 |
| 401-274 | 49-19 |
| 401-279 | 50-62 |
| 401-289 | 48-50 |
| 401-307 | 60A-13 |
| 401-310 | 52-32 |
| 401-311 | 23-15 |
| 401-315 | 56-17 |
| 401-318 | 34-23 |
| 401-318 | 34-32 |
| 401-318 | 49-52 |
| 401-330 | 15-13 |
| 401-330 | 20-35 |
| 401-332 | 15-19A |
| 401-333 | 52-22 |
| 401-334 | 58-29 |
| 401-353 | 48-36 |
| 401-354 | 48-56 |
| 401-359 | 20-32 |
| 401-361 | 20-26 |
| 401-378 | 48-49 |
| 401-385 | 48-34 |
| 401-390 | 64-16 |
| 401-394 | 56-12 |
| 401-406 | 19-27 |
| 401-416 | 19-28 |
| 401-429 | 64-8 |
| 401-456 | 19-18 |
| 401-461 | 56-35 |
| 401-543 | 40-50 |
| 401-544 | 40-50A |
| 401-918 | 19-4 |
| 401-918 | 23-40 |
| 401-919 | 40-38 |
| 401-970 | 56-37 |
| 401-971 | 56-33 |
| 401-987 | 56-31 |
| 401-987 | 56-34 |
| 401-988 | 56-29 |
| 401-992 | 56-36 |
| 402-314 | 53-7 |
| 402-324 | 19-5 |
| 402-349 | 2-62 |
| 402-351 | 2-58 |
| 402-352 | 2-59 |
| 402-352 | 2-60 |
| 402-352 | 2-61 |
| 402-669 | 48-63 |
| 402-680 | 2-56 |
| 402-680 | 15-26 |
| 402-757 | 52-6A |

| Part Number | Figure and Index No. |
|---|---|
| 402-763 | 62-67 |
| 402-777 | 32-29A |
| 402-777 | 35-19 |
| 402-890 | 12-32 |
| 402-897 | 12-31 |
| 402-915 | 2-57 |
| 403-050 | 41-19 |
| 403-401 | 58-9 |
| 404-005 | 40-37A |
| 404-100 | 15-27 |
| 404-100 | 19-23B |
| 404-100 | 41-10C |
| 404-100 | 41-13D |
| 404-100 | 49-48B |
| 404-100 | 52-36B |
| 404-101 | 13-30B |
| 404-101 | 28-17 |
| 404-101 | 41-12C |
| 404-102 | 48-68C |
| 404-104 | 52-21A |
| 404-105 | 23-26A |
| 404-122 | 23-37C |
| 404-122 | 23-47C |
| 404-224 | 12-36B |
| 404-224 | 15-28 |
| 404-224 | 40-12B |
| 404-224 | 44-31 |
| 404-224 | 48-71A |
| 404-224 | 49-40A |
| 404-224 | 52-6B |
| 404-224 | 58-14 |
| 404-225 | 19-9 |
| 404-320 | 49-23A |
| 404-322 | 48-61D |
| 404-322 | 49-23 |
| 404-323 | 19-31B |
| 404-325 | 50-30 |
| 404-391 | 13-38B |
| 404-391 | 49-36B |
| 404-391 | 49-37B |
| 404-391 | 49-38A |
| 404-391 | 52-35A |
| 404-392 | 13-24C |
| 404-392 | 44-37A |
| 404-392 | 48-53B |
| 404-392 | 48-60B |
| 404-392 | 49-44C |
| 404-392 | 51-7B |
| 404-392 | 53-17B |
| 404-394 | 44-16 |
| 404-490 | 25-6 |
| 404-491 | 60-8C |
| 404-491 | 62-43B |
| 404-521 | 55-23B |
| 404-526 | 2-27B |
| 404-526 | 2-28B |
| 404-526 | 2-29B |
| 404-526 | 5-14B |

| Part Number | Figure and Index No. |
|---|---|
| 404-526 | 10-49B |
| 404-526 | 10-50B |
| 404-526 | 10-66B |
| 404-526 | 10-67C |
| 404-526 | 15-24B |
| 404-526 | 15-36 |
| 404-526 | 19-20B |
| 404-526 | 19-29C |
| 404-526 | 19-46A |
| 404-526 | 20-33B |
| 404-526 | 20-34B |
| 404-526 | 28-16C |
| 404-526 | 28-31B |
| 404-526 | 29-12C |
| 404-526 | 29-23B |
| 404-526 | 34-56B |
| 404-526 | 35-26D |
| 404-526 | 37-28B |
| 404-526 | 38-2E |
| 404-526 | 39-19C |
| 404-526 | 39-20C |
| 404-526 | 40-9F |
| 404-526 | 40-12A |
| 404-526 | 40-26D |
| 404-526 | 41-15C |
| 404-526 | 42-3C |
| 404-526 | 42-9C |
| 404-526 | 44-18C |
| 404-526 | 44-19C |
| 404-526 | 44-20D |
| 404-526 | 44-20H |
| 404-526 | 45-67A |
| 404-526 | 45-74A |
| 404-526 | 48-43B |
| 404-526 | 48-50B |
| 404-526 | 48-64B |
| 404-526 | 49-19B |
| 404-526 | 49-39D |
| 404-526 | 49-41B |
| 404-526 | 49-54B |
| 404-526 | 50-11 |
| 404-526 | 50-18 |
| 404-526 | 50-28B |
| 404-526 | 50-59E |
| 404-526 | 50-62B |
| 404-526 | 50-62C |
| 404-526 | 52-6C |
| 404-526 | 52-8D |
| 404-526 | 52-11C |
| 404-526 | 52-33B |
| 404-526 | 53-18A |
| 404-526 | 54-19D |
| 404-526 | 54-35C |
| 404-526 | 56-25C |
| 404-526 | 58-17B |
| 404-526 | 58-18C |
| 404-526 | 58-19C |
| 404-526 | 58-30B |

| Part Number | Figure and Index No. |
|---|---|
| 404-526 | 58-32C |
| 404-526 | 58-35B |
| 404-526 | 60-36C |
| 404-526 | 62-39C |
| 404-526 | 64-2C |
| 404-526 | 65-22C |
| 404-526 | 65-26C |
| 404-528 | 23-17 |
| 404-528 | 27-11B |
| 404-528 | 36-1C |
| 404-528 | 36-20D |
| 404-528 | 40-28C |
| 404-528 | 42-14 |
| 404-528 | 45-56B |
| 404-528 | 54-16C |
| 404-528 | 54-32C |
| 404-528 | 54-50B |
| 404-528 | 59-21A |
| 404-528 | 59-44C |
| 404-528 | 59-72H |
| 404-528 | 60A-4C |
| 404-528 | 60A-9C |
| 404-528 | 68-11B |
| 404-529 | 7-4A |
| 404-529 | 8-26C |
| 404-529 | 26-25C |
| 404-529 | 42-4C |
| 404-529 | 44-24D |
| 404-529 | 44-27C |
| 404-529 | 45-32 |
| 404-529 | 54-42B |
| 404-529 | 59-3B |
| 404-529 | 59-42D |
| 404-529 | 59-59C |
| 404-529 | 59-67B |
| 404-529 | 59-77B |
| 404-529 | 65-23C |
| 404-529 | 65-27C |
| 404-530 | 2-56C |
| 404-530 | 15-19C |
| 404-530 | 16-25B |
| 404-530 | 16-26B |
| 404-530 | 19-5B |
| 404-530 | 20-35B |
| 404-530 | 23-9 |
| 404-530 | 23-18 |
| 404-530 | 26-30A |
| 404-530 | 32-14C |
| 404-530 | 34-23A |
| 404-530 | 34-24C |
| 404-530 | 35-56 |
| 404-530 | 48-45C |
| 404-530 | 49-4B |
| 404-530 | 49-42B |
| 404-530 | 49-52B |
| 404-530 | 52-22B |
| 404-530 | 52-32C |
| 404-530 | 53-7B |

# NUMERICAL INDEX


| Part Number | Figure and Index No. |
|---|---|
| 404-530 | 56-17B |
| 404-530 | 58-29B |
| 404-530 | 58-40A |
| 404-530 | 59-88C |
| 404-530 | 60A-13A |
| 404-531 | 20-25B |
| 404-531 | 20-26B |
| 404-531 | 20-31B |
| 404-531 | 20-32B |
| 404-531 | 21-7 |
| 404-531 | 24-13 |
| 404-531 | 35-55 |
| 404-531 | 35-59 |
| 404-531 | 48-34B |
| 404-531 | 48-36B |
| 404-531 | 48-40B |
| 404-531 | 48-49B |
| 404-531 | 48-54B |
| 404-531 | 48-56B |
| 404-532 | 2-57C |
| 404-532 | 2-58C |
| 404-532 | 2-59C |
| 404-532 | 2-60B |
| 404-532 | 2-61B |
| 404-532 | 2-62B |
| 404-532 | 56-12B |
| 404-533 | 59-71F |
| 404-533 | 60-42C |
| 404-556 | 12-31C |
| 404-556 | 12-32C |
| 404-558 | 59-82B |
| 404-558 | 62-45C |
| 404-558 | 62-46C |
| 404-558 | 62-69B |
| 404-558 | 62-71B |
| 404-563 | 19-27C |
| 404-563 | 19-28C |
| 404-838 | 19-13 |
| 404-888 | 15-25B |
| 404-891 | 40-50C |
| 404-945 | 48-63C |
| 404-962 | 54-37 |
| 404-971 | 66-4C |
| 405-406 | 36-15C |
| 405-406 | 59-40C |
| 405-450 | 42-12 |
| 405-450 | 71-6D |
| 405-457 | 59-50B |
| 405-580 | 19-38 |
| 405-580 | 37-5 |
| 406-345 | 44-11 |
| 406-346 | 36-3B |
| 406-367 | 39-9A |
| 406-412 | 2-55C |
| 406-413 | 59-44C |
| 406-415 | 2-44B |
| 406-415 | 2-55D |
| 406-428 | 66-7B |

| Part Number | Figure and Index No. |
|---|---|
| 406-428 | 66-10B |
| 406-428 | 66-15A |
| 406-443 | 26-34B |
| 406-443 | 32-9E |
| 406-443 | 32-11C |
| 406-443 | 32-13D |
| 406-447 | 59-89C |
| 406-551 | 50-27B |
| 406-637 | 15-35 |
| 406-709 | 4-25B |
| 406-823 | 14-44A |
| 406-829 | 62-67B |
| 406-927 | 2-24 |
| 406-942 | 2-26 |
| 407-041 | 14-17B |
| 407-041 | 36-15B |
| 407-041 | 70-1B |
| 407-041 | 71-6C |
| 407-042 | 59-56A |
| 407-043 | 28-18B |
| 407-043 | 40-11B |
| 407-043 | 44-31A |
| 407-043 | 44-38D |
| 407-043 | 47-19B |
| 407-043 | 59-63B |
| 407-044 | 19-37 |
| 407-044 | 59-88B |
| 407-046 | 56-29B |
| 407-046 | 56-31B |
| 407-046 | 56-34B |
| 407-046 | 56-35C |
| 407-046 | 56-36B |
| 407-102 | 59-21 |
| 407-124 | 28-30 |
| 407-136 | 19-9A |
| 407-800 | 26-35 |
| 407-800 | 38-2D |
| 407-800 | 40-12 |
| 407-800 | 63-8A |
| 408-042 | 59-40D |
| 408-045 | 19-31A |
| 408-051 | 42-16A |
| 408-100 | 59-54C |
| 408-100 | 59-58C |
| 408-105 | 7-37B |
| 408-105 | 36-2B |
| 408-105 | 59-42C |
| 408-105 | 59-49A |
| 408-105 | 59-50A |
| 408-105 | 59-59B |
| 408-105 | 59-67A |
| 408-105 | 62-46B |
| 408-815 | 44-13 |
| 408-826 | 14-17A |
| 408-833 | 41-13A |
| 408-836 | 36-25D |
| 410-035 | 5-14 |
| 410-043 | 2-8 |

| Part Number | Figure and Index No. |
|---|---|
| 410-047 | 52-1A |
| 410-054 | 2-37 |
| 410-054 | 2-38 |
| 410-054 | 15-14A |
| 410-054 | 15-40 |
| 410-100 | 13-62 |
| 411-530 | 28-18A |
| 411-531 | 28-38 |
| 411-531 | 36-25B |
| 411-531 | 44-19B |
| 411-531 | 59-58A |
| 411-531 | 65-22A |
| 411-532 | 28-31 |
| 411-532 | 32-13 |
| 411-532 | 38-12A |
| 411-532 | 40-16A |
| 411-532 | 40-26C |
| 411-532 | 42-1A |
| 411-532 | 42-3A |
| 411-532 | 43-24 |
| 411-532 | 44-3A |
| 411-532 | 44-18B |
| 411-532 | 44-20B |
| 411-532 | 44-20G |
| 411-532 | 45-67 |
| 411-532 | 45-74 |
| 411-532 | 54-24A |
| 411-532 | 54-35B |
| 411-532 | 59-63A |
| 411-532 | 60-36A |
| 411-532 | 63-17 |
| 411-532 | 63-22A |
| 411-533 | 32-11A |
| 411-533 | 39-19A |
| 411-533 | 39-20A |
| 411-533 | 54-19B |
| 411-533 | 63-14 |
| 411-533 | 64-14 |
| 411-533 | 71-4A |
| 411-534 | 56-25B |
| 411-534 | 59-54A |
| 411-534 | 64-17 |
| 411-536 | 38-2B |
| 411-537 | 32-9C |
| 411-538 | 32-8D |
| 411-538 | 49-40 |
| 414-467 | 26-8 |
| 414-506 | 59-72F |
| 414-508 | 62-43 |
| 414-690 | 52-3G |
| 414-694 | 44-17A |
| 414-732 | 66-7A |
| 414-735 | 62-39A |
| 414-741 | 66-10A |
| 414-741 | 66-15 |
| 414-761 | 2-52A |
| 414-762 | 26-37 |
| 414-762 | 26-38 |

| Part Number | Figure and Index No. |
|---|---|
| 414-781 | 62-39A |
| 414-781 | 62-42 |
| 414-781 | 62-53A |
| 414-783 | 33-15A |
| 415-171 | 27-11 |
| 415-309 | 2-39 |
| 415-309 | 2-49 |
| 415-312 | 2-40 |
| 415-312 | 2-48 |
| 415-320 | 2-27 |
| 415-321 | 10-49 |
| 415-323 | 10-50 |
| 415-376 | 31-67 |
| 415-376 | 71-1A |
| 415-378 | 15-41 |
| 415-379 | 40-53 |
| 415-385 | 31-94A |
| 415-385 | 31-99A |
| 415-385 | 66-4A |
| 415-421 | 52-3F |
| 415-448 | 44-12 |
| 415-492 | 59-65 |
| 415-493 | 40-28B |
| 415-497 | 36-2A |
| 415-497 | 54-16A |
| 415-498 | 59-57A |
| 415-498 | 62-44A |
| 415-498 | 62-45A |
| 415-498 | 62-46A |
| 415-498 | 62-69 |
| 415-498 | 62-71 |
| 415-503 | 59-71E |
| 415-504 | 61-14A |
| 415-505 | 39-37A |
| 415-505 | 60-42D |
| 415-505 | 69-12 |
| 415-507 | 60-42B |
| 415-513 | 54-32A |
| 415-513 | 60-7A |
| 415-514 | 39-10A |
| 415-514 | 62-61 |
| 415-517 | 59-44B |
| 415-518 | 23-12 |
| 415-518 | 60-8A |
| 415-518 | 60A-4A |
| 415-518 | 60A-9A |
| 415-519 | 54-50A |
| 415-519 | 71-6A |
| 415-519 | 71-10 |
| 415-520 | 59-66A |
| 415-520 | 59-69A |
| 415-520 | 69-11A |
| 415-520 | 70-1A |
| 415-521 | 45-56A |
| 415-521 | 48-37 |
| 415-521 | 62-29B |
| 415-531 | 59-49 |
| 415-532 | 59-50 |

# NUMERICAL INDEX


| Part Number | Figure and Index No. |
|---|---|
| 415-533 | 3-5B |
| 415-533 | 4-16A |
| 415-533 | 45-34 |
| 415-533 | 59-59A |
| 415-533 | 59-67 |
| 415-533 | 59-74 |
| 415-533 | 63-21A |
| 415-533 | 65-1A |
| 415-535 | 26-25A |
| 415-535 | 27-8A |
| 415-535 | 27-9 |
| 415-535 | 40-30B |
| 415-535 | 54-42A |
| 415-535 | 59-3A |
| 415-535 | 59-56 |
| 415-535 | 59-82A |
| 415-535 | 65-23 |
| 415-535 | 65-26A |
| 415-535 | 65-27A |
| 415-535 | 71-6A |
| 415-536 | 44-27A |
| 415-536 | 44-36A |
| 415-536 | 46-3A |
| 415-536 | 59-42B |
| 415-538 | 33-21 |
| 415-538 | 33-22 |
| 415-539 | 13-3B |
| 415-544 | 14-45 |
| 415-544 | 42-4A |
| 415-544 | 44-24B |
| 415-544 | 51-9 |
| 415-544 | 59-77A |
| 415-544 | 62-44A |
| 415-544 | 65-2 |
| 415-544 | 66-20A |
| 415-553 | 42-9A |
| 415-558 | 59-68A |
| 416-098 | 47-24A |
| 416-346 | 23-14 |
| 416-390 | 52-1C |
| 416-626 | 43-25 |
| 416-633 | 26-39 |
| 416-778 | 13-62 |
| 418-421 | 42-16 |
| 418-421 | 56-13C |
| 419-474 | 35-11A |
| 419-520 | 50-59G |
| 419-584 | 14-43 |
| 419-646 | 33-18B |
| 419-678 | 13-61 |
| 419-681 | 54-39 |
| 419-713 | 57-22A |
| 419-806 | 31-38A |
| 419-806 | 31-83A |
| 419-920 | 27-8 |
| 419-920 | 27-10 |
| 419-920 | 59-89B |
| 419-922 | 2-63B |

| Part Number | Figure and Index No. |
|---|---|
| 419-922 | 59-2A |
| 419-923 | 2-44A |
| 419-923 | 2-55B |
| 419-935 | 31-25B |
| 419-939 | 13-61 |
| 419-954 | 62-29B |
| 419-967 | 51-11 |
| 422-995 | 32-21B |
| 424-039 | 44-21C |
| 424-039 | 44-32D |
| 424-039 | 44-38G |
| 424-041 | 13-38C |
| 424-041 | 13-39A |
| 424-041 | 49-36C |
| 424-041 | 49-37C |
| 424-041 | 49-38B |
| 424-041 | 52-35B |
| 424-051 | 13-30C |
| 424-051 | 13-70B |
| 424-051 | 15-29 |
| 424-051 | 19-23C |
| 424-051 | 28-19 |
| 424-051 | 29-16C |
| 424-051 | 29-18A |
| 424-051 | 32-10B |
| 424-051 | 32-12B |
| 424-051 | 34-30B |
| 424-051 | 34-31B |
| 424-051 | 41-10D |
| 424-051 | 41-12D |
| 424-051 | 41-13E |
| 424-051 | 44-6A |
| 424-051 | 44-34B |
| 424-051 | 44-37 |
| 424-051 | 48-41 |
| 424-051 | 48-53C |
| 424-051 | 48-60C |
| 424-051 | 48-63D |
| 424-051 | 49-44D |
| 424-051 | 49-48C |
| 424-051 | 50-61A |
| 424-051 | 51-7C |
| 424-051 | 51-8A |
| 424-051 | 52-36C |
| 424-051 | 53-17C |
| 424-051 | 54-37B |
| 424-052 | 35-6A |
| 424-052 | 48-39 |
| 424-052 | 49-43 |
| 424-053 | 48-55 |
| 424-053 | 48-68D |
| 424-054 | 48-35 |
| 424-054 | 48-57 |
| 424-055 | 48-42 |
| 424-059 | 23-26B |
| 424-060 | 52-21B |
| 424-071 | 23-7 |
| 424-095 | 23-37D |

| Part Number | Figure and Index No. |
|---|---|
| 424-095 | 23-47D |
| 424-123 | 50-6 |
| 424-148 | 50-65B |
| 424-171 | 32-12 |
| 424-172 | 34-30 |
| 424-174 | 32-10 |
| 424-175 | 29-16 |
| 424-178 | 13-39 |
| 424-178 | 28-20 |
| 424-180 | 50-61 |
| 424-181 | 29-17 |
| 424-184 | 29-18 |
| 424-186 | 51-8 |
| 424-189 | 29-19 |
| 424-203 | 34-31 |
| 424-204 | 13-70 |
| 434-128 | 55-21A |
| 434-128 | 57-4A |
| 434-132 | 28-29A |
| 434-134 | 62-29E |
| 434-151 | 28-29 |
| 434-191 | 70-16B |
| 450-101 | 63-1 |
| 450-741 | 62-40 |
| 450-741 | 72-67 |
| 450-742 | 62-39 |
| 451-720 | 19-12A |
| 451-735 | 19-11 |
| 451-735 | 23-20 |
| 451-783 | 24-15 |
| 451-802 | 70-7 |
| 451-802 | 70-15 |
| 451-872 | 45-3 |
| 451-881 | 37-18 |
| 451-881 | 37-21 |
| 451-939 | 37-18A |
| 451-939 | 37-23 |
| 452-104 | 13-3F |
| 452-332 | 19-2 |
| 452-334 | 19-8 |
| 452-335 | 48-61E |
| 452-335 | 49-22 |
| 452-336 | 49-22A |
| 452-341 | 19-33 |
| 452-372 | 52-6 |
| 452-386 | 34-6 |
| 452-387 | 4-34 |
| 452-387 | 4-36 |
| 452-387 | 4-40 |
| 452-387 | 17-8 |
| 452-387 | 18-7 |
| 452-388 | 52-15 |
| 452-389 | 52-15A |
| 452-394 | 12-37 |
| 452-413 | 50-15 |
| 452-418 | 50-14 |
| 452-457 | 19-33A |
| 452-558 | 58-13 |

| Part Number | Figure and Index No. |
|---|---|
| 452-561 | 58-27 |
| 452-570 | 58-44 |
| 452-571 | 58-36 |
| 452-606 | 44-22 |
| 452-606 | 44-23 |
| 452-607 | 19-32 |
| 452-679 | 35-52 |
| 452-680 | 32-41 |
| 452-766 | 20-3 |
| 452-935 | 55-24 |
| 452-935 | 57-7 |
| 453-124 | 20-13 |
| 453-124 | 23-33 |
| 453-680 | 45-43 |
| 453-714 | 29-15 |
| 453-742 | 59-78 |
| 453-831 | 4-30C |
| 453-966 | 2-47 |
| 454-053 | 23-32 |
| 454-732 | 60-3C |
| 454-732 | 60A-2C |
| 454-736 | 60-3 |
| 454-738 | 60-3A |
| 454-738 | 60A-2A |
| 454-739 | 60-3B |
| 454-739 | 60A-2B |
| 454-743 | 55-32 |
| 454-766 | 60-56 |
| 454-766 | 60A-2 |
| 454-766 | 60A-44 |
| 454-797 | 60-3F |
| 454-813 | 47-23 |
| 454-813 | 65-29 |
| 454-837 | 40-35 |
| 454-868 | 38-12 |
| 454-868 | 44-20F |
| 454-868 | 45-66 |
| 454-868 | 45-73 |
| 454-868 | 56-24A |
| 454-872 | 65-24 |
| 454-887 | 32-11D |
| 454-887 | 32-13B |
| 454-887 | 44-20A |
| 454-887 | 54-19A |
| 454-887 | 54-35A |
| 454-927 | 45-24 |
| 454-927 | 62-46 |
| 454-928 | 39-26 |
| 454-928 | 44-20E |
| 454-929 | 28-1A |
| 454-929 | 40-26B |
| 454-929 | 40-30A |
| 454-929 | 44-18A |
| 454-929 | 47-24 |
| 454-930 | 45-25 |
| 454-932 | 44-19A |
| 454-932 | 56-25D |
| 454-935 | 40-26A |

# NUMERICAL INDEX


| Part Number | Figure and Index No. |
|---|---|
| 454-935 | 56-25 |
| 454-935 | 59-82 |
| 454-976 | 40-28A |
| 454-977 | 38-2 |
| 454-977 | 45-72 |
| 454-983 | 45-40A |
| 454-985 | 54-25 |
| 454-985 | 54-26 |
| 455-124 | 20-12 |
| 455-124 | 23-34 |
| 455-173 | 39-33 |
| 455-173 | 45-58 |
| 455-174 | 45-70 |
| 455-211 | 63-15 |
| 455-350 | 44-19 |
| 455-352 | 44-18 |
| 455-417 | 39-53 |
| 455-417 | 69-7 |
| 455-738 | 35-20 |
| 455-739 | 32-30 |
| 455-740 | 32-6 |
| 455-741 | 35-14 |
| 455-751 | 32-20 |
| 455-751 | 35-37 |
| 455-938 | 28-12 |
| 455-944 | 29-4A |
| 455-944 | 30-1 |
| 455-968 | 29-4 |
| 455-968 | 30-13 |
| 456-015 | 19-7 |
| 456-682 | 47-22 |
| 456-682 | 72-28 |
| 456-703 | 59-72D |
| 456-703 | 60-9A |
| 456-703 | 60A-14A |
| 456-714 | 60-51A |
| 456-758 | 59-64C |
| 458-844 | 45-38 |
| 458-855 | 40-45 |
| 458-881 | 28-22 |
| 458-894 | 23-4 |
| 458-894 | 28-23 |
| 458-894 | 29-5 |
| 458-900 | 28-26 |
| 458-904 | 29-5D |
| 458-910 | 28-25 |
| 458-910 | 28-26 |
| 458-946 | 45-8 |
| 458-948 | 45-40 |
| 458-958 | 37-6 |
| 460-068 | 32-28 |
| 460-068 | 35-46 |
| 460-105 | 71-1 |
| 460-110 | 71-1 |
| 460-112 | 71-1 |
| 460-464 | 46-15 |
| 460-594 | 59-42 |
| 460-632 | 40-18 |

| Part Number | Figure and Index No. |
|---|---|
| 460-652 | 45-51 |
| 460-685 | 40-36 |
| 460-691 | 23-24 |
| 460-691 | 23-36 |
| 461-136 | 49-45 |
| 461-629 | 62-33C |
| 461-629 | 65-10A |
| 461-629 | 65-13A |
| 461-629 | 71-5B |
| 461-641 | 71-5A |
| 461-659 | 59-53A |
| 461-659 | 59-60B |
| 461-659 | 62-34C |
| 461-659 | 71-5B |
| 461-660 | 59-53 |
| 461-660 | 59-60A |
| 461-660 | 60A-25B |
| 461-660 | 62-34A |
| 461-660 | 71-5A |
| 461-684 | 60A-25A |
| 461-684 | 62-34B |
| 461-740 | 45-2A |
| 461-905 | 41-11 |
| 461-907 | 37-3 |
| 462-024 | 20-11 |
| 462-024 | 23-31 |
| 462-049 | 45-11 |
| 462-050 | 20-16 |
| 463-380 | 28-18 |
| 463-389 | 62-29F |
| 463-390 | 39-34A |
| 463-422 | 4-19B |
| 463-422 | 62-25 |
| 464-412 | 13-16 |
| 465-258 | 62-33B |
| 465-258 | 65-10 |
| 465-258 | 65-13 |
| 466-401 | 58-38 |
| 468-029 | 63-9 |
| 471-084 | 32-8A |
| 472-010 | 13-7A |
| 472-017 | 26-16 |
| 472-017 | 43-15B |
| 472-027 | 59-25B |
| 472-028 | 60-30A |
| 472-028 | 60A-30A |
| 472-071 | 62-62 |
| 472-200 | 55-31A |
| 472-200 | 60-33B |
| 472-200 | 60A-32A |
| 472-200 | 60A-38B |
| 472-200 | 61-12B |
| 472-200 | 61-13C |
| 472-899 | 62-52A |
| 473-700 | 57-28 |
| 474-364 | 52-2A |
| 475-124 | 40-7 |
| 475-272 | 59-64A |

| Part Number | Figure and Index No. |
|---|---|
| 476-647 | 39-46 |
| 476-647 | 45-59 |
| 476-662 | 46-2A |
| 476-662 | 46-12 |
| 476-673 | 64-3 |
| 476-676 | 59-87 |
| 476-676 | 64-4 |
| 476-678 | 45-14 |
| 476-678 | 45-69 |
| 476-685 | 45-46 |
| 476-686 | 45-63 |
| 476-688 | 40-47 |
| 476-697 | 45-69 |
| 476-705 | 45-47 |
| 477-618 | 28-27 |
| 477-629 | 40-51 |
| 477-640 | 15-40B |
| 477-640 | 26-8B |
| 477-668 | 40-11 |
| 477-670 | 46-14 |
| 477-672 | 15-14C |
| 477-672 | 17-19 |
| 477-696 | 14-17C |
| 477-696 | 31-67A |
| 477-708 | 32-32C |
| 477-708 | 34-23B |
| 477-708 | 35-45 |
| 477-729 | 59-50B |
| 477-778 | 46-3B |
| 477-816 | 15-41A |
| 477-850 | 37-5B |
| 480-696 | 49-16 |
| 480-698 | 49-17A |
| 480-701 | 34-26 |
| 480-701 | 35-7A |
| 480-701 | 35-13 |
| 480-730 | 52-8B |
| 480-732 | 34-22 |
| 480-732 | 35-13A |
| 480-777 | 34-28 |
| 480-789 | 34-29 |
| 480-800 | 13-40 |
| 480-801 | 34-27 |
| 481-247 | 62-1 |
| 481-403 | 59-75 |
| 481-640 | 50-58 |
| 481-651 | 52-20 |
| 481-652 | 48-33 |
| 481-772 | 7-37 |
| 484-198 | 26-17C |
| 484-198 | 26-21C |
| 484-280 | 65-25 |
| 484-675 | 30-16 |
| 484-683 | 20-21 |
| 484-705 | 20-18 |
| 484-720 | 20-19 |
| 484-747 | 50-13 |
| 484-748 | 30-22 |

| Part Number | Figure and Index No. |
|---|---|
| 484-769 | 23-22 |
| 484-788 | 30-8 |
| 484-792 | 8-28 |
| 484-792 | 23-28 |
| 484-829 | 32-4A |
| 484-841 | 54-45 |
| 484-945 | 25-4 |
| 485-196 | 56-40A |
| 485-196 | 56-43 |
| 485-196 | 57-12A |
| 485-197 | 56-41 |
| 485-197 | 57-10A |
| 485-198 | 56-40 |
| 485-303 | 56-1C |
| 485-315 | 20-15 |
| 486-079 | 52-3D |
| 486-103 | 59-73A |
| 486-145 | 13-26 |
| 486-156 | 66-9A |
| 486-188 | 23-27 |
| 486-274 | 40-37 |
| 486-282 | 7-37A |
| 486-286 | 14-44 |
| 486-439 | 45-71 |
| 486-560 | 35-56 |
| 486-563 | 49-53 |
| 486-570 | 40-54 |
| 486-684 | 59-54 |
| 487-086 | 59-73C |
| 487-192 | 59-89A |
| 487-437 | 41-10E |
| 487-608 | 62-68 |
| 487-608 | 65-22 |
| 487-629 | 31-31 |
| 487-685 | 43-23 |
| 487-722 | 59-77 |
| 487-722 | 65-26 |
| 487-725 | 56-4 |
| 487-728 | 43-23 |
| 487-768 | 63-10 |
| 487-925 | 65-8 |
| 488-315 | 39-24 |
| 488-315 | 39-51 |
| 488-315 | 69-8 |
| 488-327 | 44-30 |
| 488-463 | 71-6 |
| 488-545 | 59-40 |
| 488-701 | 35-57 |
| 488-702 | 45-33 |
| 488-722 | 39-5 |
| 488-722 | 63-7A |
| 488-752 | 71-3 |
| 489-873 | 50-52 |
| 489-910 | 48-51 |
| 489-910 | 49-46 |
| 489-910 | 52-31 |
| 491-050 | 28-21 |
| 491-050 | 28-24 |

# NUMERICAL INDEX


| Part Number | Figure and Index No. |
|---|---|
| 491-050 | 29-5C |
| 491-059 | 39-25 |
| 491-060 | 28-26A |
| 491-082 | 46-13 |
| 491-947 | 46-2 |
| 492-022 | 47-21 |
| 492-100 | 39-9 |
| 492-240 | 37-12 |
| 492-241 | 39-31 |
| 492-312 | 45-9 |
| 494-001 | 54-39A |
| 494-002 | 13-62A |
| 494-004 | 57-22B |
| 494-005 | 40-54A |
| 494-016 | 26-38A |
| 494-025 | 20-17 |
| 494-037 | 26-8A |
| 494-037 | 26-39A |
| 494-040 | 34-24A |
| 494-066 | 50-27A |
| 494-093 | 52-8C |
| 494-101 | 26-37A |
| 494-103 | 48-58 |
| 494-123 | 54-27 |
| 494-177 | 30-11 |
| 494-227 | 40-53A |
| 494-285 | 32-9D |
| 494-644 | 45-12 |
| 494-678 | 70-1 |
| 506-503 | 59-1A |
| 506-541 | 62-29D |
| 506-550 | 20-27 |
| 506-557 | 34-48A |
| 506-557 | 35-23A |
| 508-007 | 31-38B |
| 508-008 | 43-25A |
| 510-306 | 61-20 |
| 514-701 | 60-42F |
| 515-709 | 36-1A |
| 515-709 | 36-15A |
| 515-710 | 68-11A |
| 515-712 | 36-6A |
| 515-712 | 61-20 |
| 515-715 | 36-3A |
| 515-717 | 44-26A |
| 519-853 | 13-56 |
| 520-003 | 66-9A |
| 520-009 | 36-4A |
| 520-009 | 36-5A |
| 520-009 | 36-7A |
| 520-009 | 36-8B |
| 520-009 | 36-19A |
| 520-009 | 36-20B |
| 520-012 | 8-26A |
| 520-025 | 52-2B |
| 520-045 | 59-40A |
| 520-046 | 60-24 |
| 520-046 | 60A-24 |

| Part Number | Figure and Index No. |
|---|---|
| 520-056 | 13-44 |
| 524-145 | 44-34 |
| 533-381 | 47-20 |
| 548-161 | 66-17 |
| 548-190 | 36-3 |
| 548-435 | 36-5 |
| 548-671 | 47-18 |
| 548-729 | 40-34 |
| 548-868 | 36-2 |
| 548-885 | 36-14 |
| 548-885 | 60-42 |
| 548-915 | 45-71 |
| 550-556 | 36-7 |
| 550-880 | 72-4 |
| 551-038 | 40-6 |
| 551-607 | 19-12 |
| 551-607 | 23-19 |
| 551-608 | 23-19 |
| 551-655 | 23-19 |
| 551-711 | 23-8 |
| 551-711 | 25-1 |
| 551-764 | 23-2 |
| 551-764 | 24-1 |
| 551-779 | 19-19A |
| 551-779 | 22-1 |
| 551-785 | 19-19 |
| 551-785 | 21-1 |
| 552-250 | 58-4 |
| 553-230 | 56-10 |
| 553-266 | 12-36A |
| 553-266 | 15-34 |
| 553-494 | 62-7 |
| 553-518 | 62-55 |
| 553-570 | 52-3B |
| 553-571 | 52-3E |
| 553-685 | 45-62 |
| 553-778 | 52-26C |
| 553-891 | 20-14 |
| 554-094 | 44-20 |
| 554-142 | 54-35 |
| 554-143 | 54-18 |
| 554-144 | 54-19 |
| 554-330 | 62-20A |
| 554-336 | 62-20 |
| 554-382 | 72-43 |
| 554-422 | 32-15 |
| 554-422 | 34-2B |
| 554-435 | 62-1A |
| 554-552 | 37-4 |
| 554-575 | 28-5 |
| 554-575 | 39-22 |
| 554-575 | 39-49A |
| 554-575 | 47-14 |
| 554-575 | 55-1A |
| 554-575 | 69-10 |
| 554-613 | 59-64D |
| 554-640 | 55-1A |
| 554-640 | 55-10 |

| Part Number | Figure and Index No. |
|---|---|
| 554-678 | 37-13 |
| 554-678 | 37-16 |
| 554-678 | 71-3 |
| 554-715 | 58-42 |
| 554-752 | 54-14 |
| 554-757 | 44-26C |
| 554-772 | 54-15 |
| 554-772 | 54-28 |
| 554-772 | 54-34 |
| 554-793 | 38-3 |
| 554-861 | 57-16 |
| 554-885 | 45-72A |
| 554-941 | 45-65 |
| 554-941 | 54-24 |
| 554-953 | 39-20 |
| 554-953 | 62-44 |
| 554-955 | 59-72E |
| 554-955 | 62-28 |
| 554-955 | 62-70 |
| 554-955 | 65-27 |
| 554-956 | 32-21A |
| 554-956 | 35-38 |
| 554-979 | 48-52 |
| 554-979 | 49-47 |
| 554-979 | 50-53 |
| 554-979 | 52-37 |
| 554-985 | 37-8 |
| 555-846 | 40-14A |
| 556-105 | 39-2 |
| 556-408 | 45-41 |
| 556-536 | 59-86B |
| 556-562 | 59-73 |
| 557-111 | 59-59 |
| 557-111 | 59-67C |
| 557-122 | 59-68 |
| 557-370 | 63-11 |
| 557-580 | 40-52 |
| 558-300 | 59-25C |
| 558-802 | 46-2B |
| 558-806 | 29-5A |
| 558-807 | 39-9B |
| 558-807 | 69-9 |
| 558-829 | 45-39 |
| 558-832 | 45-41 |
| 558-900 | 37-7 |
| 558-900 | 38-5 |
| 558-913 | 37-24 |
| 559-031 | 63-4 |
| 559-083 | 46-2C |
| 560-835 | 37-17 |
| 560-951 | 47-6 |
| 561-012 | 56-26 |
| 561-013 | 56-27 |
| 561-022 | 55-31B |
| 561-027 | 60-32A |
| 561-027 | 60-33A |
| 561-027 | 60A-32B |
| 561-027 | 60A-38A |

| Part Number | Figure and Index No. |
|---|---|
| 561-027 | 61-12A |
| 561-027 | 61-13B |
| 564-876 | 32-40 |
| 564-876 | 35-50 |
| 564-878 | 32-39 |
| 564-879 | 35-51 |
| 565-450 | 59-73B |
| 566-406 | 37-13A |
| 566-406 | 37-24A |
| 571-136 | 59-22 |
| 571-149 | 34-36 |
| 571-162 | 65-4 |
| 571-192 | 60-31 |
| 571-192 | 60A-31 |
| 572-592 | 62-4A |
| 572-593 | 62-4 |
| 572-610 | 59-19A |
| 572-634 | 62-29A |
| 572-662 | 59-23B |
| 576-665 | 24-5 |
| 580-881 | 19-30 |
| 580-881 | 72-3 |
| 580-999 | 72-2 |
| 581-053 | 72-75 |
| 581-054 | 72-76 |
| 581-055 | 72-41 |
| 581-330 | 53-8 |
| 581-332 | 53-9 |
| 581-391 | 72-80 |
| 581-433 | 65-25A |
| 581-557 | 72-9 |
| 581-657 | 60-3E |
| 581-657 | 60A-2E |
| 581-685 | 72-42C |
| 581-688 | 72-42 |
| 581-689 | 72-10 |
| 581-760 | 4-31B |
| 581-760 | 6-25 |
| 581-760 | 17-20 |
| 581-890 | 72-42B |
| 581-891 | 72-42A |
| 581-928 | 13-61A |
| 582-155 | 72-78 |
| 582-614 | 72-65 |
| 582-618 | 72-12 |
| 582-619 | 72-11 |
| 582-662 | 72-9A |
| 582-681 | 72-1 |
| 582-783 | 19-35 |
| 582-783 | 72-15 |
| 582-789 | 2-68 |
| 582-789 | 72-13 |
| 582-872 | 72-71 |
| 582-873 | 72-72 |
| 582-875 | 72-69 |
| 582-875 | 72-74 |
| 583-079 | 72-17 |
| 583-102 | 72-63 |

# NUMERICAL INDEX


| Part Number | Figure and Index No. |
|---|---|
| 583-112 | 72-64 |
| 583-311 | 72-7 |
| 583-410 | 40-6A |
| 583-536 | 72-25 |
| 583-542 | 72-26 |
| 583-581 | 72-21 |
| 583-582 | 72-22 |
| 583-583 | 2-69 |
| 583-583 | 72-23 |
| 583-584 | 72-24 |
| 583-666 | 72-19 |
| 584-019 | 43-23A |
| 584-140 | 26-17B |
| 584-140 | 26-21B |
| 584-195 | 59-71B |
| 584-256 | 56-27A |
| 584-257 | 56-26A |
| 584-258 | 56-46 |
| 584-278 | 60-44 |
| 584-278 | 60A-34B |
| 584-315 | 59-57 |
| 584-425 | 65-1 |
| 587-299 | 34-5 |
| 587-381 | 13-35 |
| 587-398 | 13-29 |
| 587-404 | 32-16 |
| 587-593 | 26-21 |
| 587-594 | 26-17 |
| 587-857 | 59-55A |
| 587-984 | 60A-26 |
| 588-178 | 60A-27 |
| 588-391 | 45-50 |
| 588-436 | 45-49 |
| 588-464 | 60-39 |
| 588-469 | 40-15 |
| 592-633 | 57-12 |
| 592-634 | 45-64A |
| 592-683 | 34-61A |
| 594-003 | 26-17A |
| 594-003 | 26-21A |
| 596-664 | 70-4 |
| 596-664 | 70-5 |
| 597-893 | 70-6 |
| 597-893 | 70-10 |
| 598-184 | 70-14 |
| 598-184 | 70-14 |
| 598-186 | 70-14 |
| 598-395 | 2-37A |
| 598-395 | 2-38A |
| 598-395 | 15-14B |
| 598-395 | 15-40A |
| 598-395 | 62-53B |
| 598-599 | 36-10A |
| 599-012 | 69-1 |
| 599-179 | 59-72C |
| 599-282 | 36-19 |
| 599-515 | 68-1 |
| 599-543 | 36-18 |

| Part Number | Figure and Index No. |
|---|---|
| 599-549 | 36-8 |
| 599-549 | 36-8A |
| 599-549 | 66-19 |
| 599-551 | 36-20 |
| 599-552 | 36-20A |
| 599-562 | 36-4 |
| 599-608 | 52-2 |
| 599-703 | 59-84 |
| 600-701 | 56-44 |
| 601-203 | 70-19 |
| 601-210 | 66-13 |
| 601-212 | 66-9 |
| 601-229 | 66-14 |
| 601-242 | 59-86C |
| 601-243 | 59-86D |
| 601-244 | 66-20 |
| 601-245 | 66-9 |
| 602-239 | 66-8 |
| 602-275 | 57-14 |
| 602-290 | 69-1 |
| 602-319 | 36-30 |
| 602-319 | 66-18 |
| 602-332 | 60A-15 |
| 602-333 | 59-86F |
| 602-409 | 59-83 |
| 602-418 | 36-4 |
| 602-828 | 39-57A |
| 602-828 | 39-58A |
| 603-314 | 44-21B |
| 603-314 | 44-32C |
| 603-314 | 44-38F |
| 603-318 | 40-37B |
| 603-349 | 2-38B |
| 603-350 | 27-10A |
| 603-500 | 56-42 |
| 603-800 | 33-21A |
| 603-800 | 33-22A |
| 606-616 | 42-4B |
| 651-547 | 56-1A |
| 651-547 | 56-1B |
| 651-659 | 60-53 |
| 651-659 | 60A-41 |
| 651-660 | 60-54 |
| 651-660 | 60A-42 |
| 651-661 | 60-55 |
| 651-661 | 60A-43 |
| 651-673 | 68-1 |
| 652-167 | 66-8 |
| 652-167 | 66-11 |
| 652-168 | 66-11 |
| 652-370 | 66-10 |
| 652-377 | 66-6 |
| 652-378 | 66-12 |
| 652-520 | 66-12 |
| 652-534 | 66-2 |
| 653-516 | 60A-33 |
| 653-524 | 60A-36 |
| 653-588 | 60-27 |

| Part Number | Figure and Index No. |
|---|---|
| 653-588 | 60A-28 |
| 653-623 | 62-1A |
| 653-641 | 55-4 |
| 654-001 | 38-8 |
| 654-001 | 57-11 |
| 654-096 | 37-22 |
| 654-103 | 40-32 |
| 654-212 | 52-1E |
| 654-221 | 62-45 |
| 654-502 | 60A-40 |
| 654-505 | 60A-39 |
| 654-513 | 60A-37 |
| 654-556 | 47-2A |
| 654-557 | 47-2 |
| 655-100 | 13-3E |
| 656-108 | 72-37 |
| 656-160 | 72-36 |
| 656-161 | 72-29 |
| 656-163 | 72-35 |
| 656-164 | 72-34 |
| 656-177 | 72-50 |
| 656-237 | 72-6 |
| 656-238 | 72-6 |
| 656-258 | 72-47 |
| 656-259 | 72-48 |
| 656-322 | 72-79 |
| 656-341 | 72-49 |
| 656-342 | 72-34 |
| 656-348 | 72-60 |
| 656-372 | 72-34 |
| 680-145 | 63-13 |
| 680-483 | 40-1 |
| 680-500 | 40-31 |
| 683-019 | 19-34 |
| 683-019 | 72-14 |
| 683-291 | 72-31 |
| 683-292 | 72-39 |
| 683-293 | 72-38 |
| 683-294 | 72-32 |
| 683-297 | 72-51 |
| 683-301 | 72-61 |
| 683-302 | 72-40 |
| 683-311 | 72-33 |
| 683-315 | 72-68 |
| 683-316 | 72-66 |
| 683-336 | 72-25A |
| 683-402 | 72-14 |
| 683-411 | 72-25A |
| 683-502 | 59-25A |
| 683-504 | 62-52A |
| 683-721 | 70-2 |
| 683-724 | 70-8 |
| 683-725 | 70-9 |
| 683-726 | 70-3 |
| 683-728 | 70-10 |
| 683-735 | 70-4 |
| 683-736 | 70-16 |
| 683-937 | 72-46 |

| Part Number | Figure and Index No. |
|---|---|
| 683-950 | 72-25A |
| 683-965 | 72-38 |
| 683-976 | 72-56 |
| 683-977 | 72-55 |
| 683-980 | 72-53 |
| 683-981 | 72-52 |
| 683-982 | 72-54 |
| 684-726 | 72-55 |
| 684-744 | 72-81 |
| 686-046 | 63-12 |
| 686-207 | 34-60C |
| 686-208 | 34-61 |
| 686-215 | 59-85 |
| 686-813 | 59-72A |
| 686-814 | 59-64B |
| 686-814 | 59-71C |
| 686-814 | 59-72B |
| 686-820 | 65-11 |
| 687-211 | 60-38 |
| 687-541 | 13-3A |
| 687-687 | 72-44 |
| 687-688 | 72-46 |
| 687-703 | 56-3 |
| 687-800 | 60-3D |
| 687-800 | 60A-2D |
| 688-175 | 60-26 |
| 688-289 | 52-38A |
| 688-296 | 60-33 |
| 688-296 | 60A-32 |
| 688-296 | 61-13 |
| 688-297 | 61-12 |
| 688-298 | 55-31 |
| 688-298 | 60-32 |
| 688-298 | 60A-38 |
| 688-298 | 61-13A |
| 688-374 | 31-2C |
| 688-374 | 59-24A |
| 688-425 | 57-9 |
| 688-426 | 60-28 |
| 688-427 | 62-39D |
| 689-106 | 57-10 |
| 690-091 | 41-10 |
| 690-609 | 10-67B |
| 690-609 | 12-31B |
| 690-609 | 12-32B |
| 690-609 | 13-24B |
| 690-609 | 13-24D |
| 690-609 | 15-31 |
| 690-609 | 18-9B |
| 690-609 | 19-23A |
| 690-609 | 19-29B |
| 690-609 | 26-34A |
| 690-609 | 28-31A |
| 690-609 | 29-16B |
| 690-609 | 31-69B |
| 690-609 | 32-10A |
| 690-609 | 32-12A |
| 690-609 | 32-13C |

# NUMERICAL INDEX


| Part Number | Figure and Index No. |
|---|---|
| 690-609 | 34-56A |
| 690-609 | 35-26C |
| 690-609 | 38-12B |
| 690-609 | 39-19B |
| 690-609 | 39-20B |
| 690-609 | 40-9E |
| 690-609 | 40-11A |
| 690-609 | 40-16B |
| 690-609 | 42-3B |
| 690-609 | 42-9B |
| 690-609 | 44-20C |
| 690-609 | 44-34A |
| 690-609 | 45-67B |
| 690-609 | 45-74B |
| 690-609 | 47-23A |
| 690-609 | 48-60A |
| 690-609 | 48-63B |
| 690-609 | 50-26A |
| 690-609 | 50-59D |
| 690-609 | 50-62A |
| 690-609 | 50-65A |
| 690-609 | 51-7A |
| 690-609 | 52-11B |
| 690-609 | 52-33A |
| 690-609 | 58-9A |
| 690-609 | 59-54B |
| 690-609 | 59-58B |
| 690-609 | 59-68B |
| 690-609 | 71-4B |
| 690-611 | 2-56A |
| 690-611 | 13-30A |
| 690-611 | 15-19B |
| 690-611 | 15-25A |
| 690-611 | 15-32 |
| 690-611 | 15-33A |
| 690-611 | 16-25A |
| 690-611 | 16-26A |
| 690-611 | 20-35A |
| 690-611 | 23-10 |
| 690-611 | 26-28A |
| 690-611 | 26-30 |
| 690-611 | 28-33 |
| 690-611 | 32-32B |
| 690-611 | 35-45 |
| 690-611 | 35-56 |
| 690-611 | 37-5A |
| 690-611 | 40-38A |
| 690-611 | 41-12B |
| 690-611 | 42-16B |
| 690-611 | 48-45A |
| 690-611 | 49-4A |
| 690-611 | 49-42A |
| 690-611 | 49-52A |
| 690-611 | 52-22A |
| 690-611 | 53-7A |
| 690-611 | 58-29A |
| 690-611 | 58-40 |
| 690-611 | 59-10B |

| Part Number | Figure and Index No. |
|---|---|
| 690-611 | 64-8A |
| 690-612 | 2-27A |
| 690-612 | 2-28A |
| 690-612 | 2-29A |
| 690-612 | 5-14A |
| 690-612 | 10-66A |
| 690-612 | 10-67A |
| 690-612 | 12-31A |
| 690-612 | 12-32A |
| 690-612 | 13-3C |
| 690-612 | 15-24A |
| 690-612 | 15-30 |
| 690-612 | 19-20A |
| 690-612 | 20-33A |
| 690-612 | 20-34A |
| 690-612 | 28-16B |
| 690-612 | 28-38A |
| 690-612 | 29-12B |
| 690-612 | 29-16A |
| 690-612 | 29-18B |
| 690-612 | 29-23A |
| 690-612 | 32-9F |
| 690-612 | 32-11B |
| 690-612 | 32-13A |
| 690-612 | 32-35B |
| 690-612 | 32-37A |
| 690-612 | 34-30A |
| 690-612 | 37-28A |
| 690-612 | 38-2C |
| 690-612 | 40-9D |
| 690-612 | 41-10B |
| 690-612 | 41-13C |
| 690-612 | 41-15B |
| 690-612 | 42-1B |
| 690-612 | 43-24A |
| 690-612 | 44-21A |
| 690-612 | 44-26B |
| 690-612 | 44-32B |
| 690-612 | 44-37B |
| 690-612 | 44-38E |
| 690-612 | 47-19C |
| 690-612 | 48-43A |
| 690-612 | 48-50A |
| 690-612 | 48-53A |
| 690-612 | 48-60 |
| 690-612 | 48-63A |
| 690-612 | 48-64A |
| 690-612 | 49-19A |
| 690-612 | 49-35A |
| 690-612 | 49-39B |
| 690-612 | 49-39C |
| 690-612 | 49-41A |
| 690-612 | 49-44A |
| 690-612 | 49-48A |
| 690-612 | 49-54A |
| 690-612 | 50-4 |
| 690-612 | 50-10 |
| 690-612 | 50-28A |

| Part Number | Figure and Index No. |
|---|---|
| 690-612 | 50-55 |
| 690-612 | 50-59C |
| 690-612 | 52-11A |
| 690-612 | 52-36A |
| 690-612 | 53-17A |
| 690-612 | 54-19C |
| 690-612 | 54-37A |
| 690-612 | 58-17A |
| 690-612 | 58-18A |
| 690-612 | 58-19A |
| 690-612 | 58-30A |
| 690-612 | 58-32A |
| 690-612 | 58-35A |
| 690-612 | 59-63C |
| 690-612 | 60-36B |
| 690-612 | 63-14A |
| 690-612 | 63-17A |
| 690-612 | 64-2B |
| 690-612 | 64-14A |
| 690-612 | 64-17A |
| 690-612 | 65-22B |
| 690-613 | 2-56B |
| 690-613 | 13-70A |
| 690-613 | 15-42 |
| 690-613 | 19-4A |
| 690-613 | 19-5A |
| 690-613 | 25-7 |
| 690-613 | 25-21 |
| 690-613 | 26-32A |
| 690-613 | 26-33A |
| 690-613 | 32-14A |
| 690-613 | 34-24B |
| 690-613 | 34-31A |
| 690-613 | 48-45B |
| 690-613 | 56-17A |
| 690-613 | 59-88A |
| 690-615 | 37-11 |
| 690-616 | 7-4B |
| 690-616 | 26-25B |
| 690-616 | 40-30C |
| 690-616 | 44-24C |
| 690-616 | 44-27B |
| 690-616 | 55-23A |
| 690-616 | 59-57B |
| 690-616 | 62-44B |
| 690-616 | 62-45B |
| 690-616 | 62-69A |
| 690-616 | 62-71A |
| 690-616 | 63-21B |
| 690-616 | 65-23B |
| 690-616 | 65-26B |
| 690-617 | 41-20 |
| 690-618 | 4-16B |
| 690-618 | 8-26B |
| 690-618 | 51-9A |
| 690-618 | 65-1B |
| 690-618 | 65-27B |
| 690-619 | 20-25A |

| Part Number | Figure and Index No. |
|---|---|
| 690-619 | 20-26A |
| 690-619 | 23-37B |
| 690-619 | 23-47B |
| 690-619 | 44-14 |
| 690-619 | 48-38 |
| 690-619 | 48-68B |
| 690-619 | 56-37A |
| 690-619 | 71-6B |
| 690-620 | 2-57B |
| 690-620 | 19-27B |
| 690-620 | 19-28B |
| 690-620 | 30-18 |
| 690-620 | 50-59B |
| 690-620 | 56-29A |
| 690-620 | 56-34A |
| 690-620 | 56-35B |
| 690-620 | 56-36A |
| 690-623 | 50-5 |
| 690-624 | 65-2A |
| 690-624 | 65-23A |
| 690-626 | 40-46 |
| 690-627 | 23-38 |
| 690-628 | 20-31A |
| 690-628 | 20-32A |
| 690-628 | 21-6 |
| 690-628 | 23-37A |
| 690-628 | 23-47A |
| 690-628 | 24-4 |
| 690-628 | 35-55 |
| 690-628 | 35-59 |
| 690-628 | 48-34A |
| 690-628 | 48-36A |
| 690-628 | 48-40A |
| 690-628 | 48-44 |
| 690-628 | 48-49A |
| 690-628 | 48-54A |
| 690-628 | 48-56A |
| 690-628 | 56-33A |
| 690-629 | 2-57A |
| 690-629 | 2-58A |
| 690-629 | 2-59A |
| 690-629 | 2-60A |
| 690-629 | 2-62A |
| 690-629 | 19-14 |
| 690-629 | 19-27A |
| 690-629 | 19-28A |
| 690-629 | 48-48 |
| 690-629 | 56-12A |
| 690-629 | 56-31A |
| 690-629 | 56-35A |
| 690-629 | 64-16A |
| 690-630 | 40-50B |
| 690-630 | 52-21 |
| 690-631 | 56-30A |
| 690-639 | 42-13 |
| 690-639 | 54-16B |
| 690-639 | 59-40B |
| 690-639 | 59-72G |

# NUMERICAL INDEX


| Part Number | Figure and Index No. |
|---|---|
| 690-639 | 60-8B |
| 690-639 | 60A-4B |
| 690-639 | 60A-9B |
| 690-639 | 71-6B |
| 690-639 | 71-10A |
| 690-640 | 13-38A |
| 690-640 | 23-11 |
| 690-640 | 27-11A |
| 690-640 | 31-99B |
| 690-640 | 36-1B |
| 690-640 | 36-20C |
| 690-640 | 49-36A |
| 690-640 | 49-37A |
| 690-640 | 49-57 |
| 690-640 | 54-32B |
| 690-640 | 54-50C |
| 690-640 | 59-66B |
| 690-640 | 59-69B |
| 690-640 | 62-39B |
| 690-640 | 62-43A |
| 690-640 | 69-11B |
| 690-647 | 13-44B |
| 690-647 | 13-55 |
| 690-649 | 66-4B |
| 690-657 | 10-49A |
| 690-657 | 10-50A |
| 690-657 | 12-52A |
| 690-659 | 32-8B |
| 690-660 | 62-29C |
| 690-668 | 32-21C |
| 690-668 | 35-38 |
| 690-668 | 69-12A |
| 690-669 | 59-10C |
| 690-727 | 7-4 |
| 690-812 | 45-13 |
| 691-218 | 39-25 |
| 691-218 | 39-47 |
| 691-220 | 29-5B |
| 691-223 | 45-4 |
| 691-225 | 39-32 |
| 691-225 | 39-55 |
| 691-314 | 20-31 |
| 692-306 | 70-18 |
| 694-004 | 59-71A |
| 694-025 | 59-86E |
| 694-209 | 44-6 |
| 751-201 | 62-6A |
| 751-202 | 62-6 |
| 751-405 | 24-14 |
| 751-489 | 24-7 |
| 751-772 | 24-10 |
| 751-772 | 24-12 |
| 751-799 | 45-2C |
| 751-819 | 21-3 |
| 751-872 | 45-2B |
| 752-342 | 25-14 |
| 752-342 | 25-18 |
| 752-571 | 22-13 |

| Part Number | Figure and Index No. |
|---|---|
| 752-584 | 30-7 |
| 752-585 | 30-9 |
| 752-826 | 25-15 |
| 752-826 | 25-19 |
| 752-830 | 21-4 |
| 752-830 | 24-11 |
| 752-965 | 25-8 |
| 752-966 | 25-9 |
| 753-407 | 25-5 |
| 753-408 | 25-20 |
| 753-448 | 21-2 |
| 753-850 | 25-10 |
| 753-920 | 25-2 |
| 753-956 | 28-13 |
| 754-535 | 24-8 |
| 754-848 | 30-10 |
| 754-855 | 22-10 |
| 754-895 | 38-11 |
| 755-049 | 47-19 |
| 755-075 | 62-7A |
| 755-076 | 62-5A |
| 755-082 | 30-20 |
| 755-096 | 62-11B |
| 755-818 | 25-11 |
| 755-883 | 25-12 |
| 755-884 | 25-13 |
| 755-885 | 25-16 |
| 755-886 | 25-17 |
| 755-887 | 25-3 |
| 755-948 | 28-14 |
| 755-964 | 21-8 |
| 755-999 | 24-9 |
| 756-018 | 30-21 |
| 756-118 | 30-19 |
| 756-621 | 30-23 |
| 756-666 | 24-2 |
| 756-685 | 22-12 |
| 757-318 | 30-17 |
| 757-479 | 30-5 |
| 757-480 | 30-2 |
| 757-580 | 30-24 |
| 757-899 | 37-27A |
| 758-392 | 22-6 |
| 758-394 | 22-11 |
| 758-456 | 21-5 |
| 758-457 | 30-26 |
| 758-696 | 68-3 |
| 761-208 | 62-11 |
| 761-253 | 62-8 |
| 761-254 | 62-8A |
| 761-255 | 62-13 |
| 761-778 | 55-22 |
| 761-778 | 57-4 |
| 761-821 | 38-1 |
| 761-889 | 68-7 |
| 762-003 | 62-5 |
| 762-128 | 68-2 |
| 762-275 | 30-6 |

| Part Number | Figure and Index No. |
|---|---|
| 762-276 | 30-3 |
| 762-277 | 30-4 |
| 762-426 | 62-11A |
| 762-531 | 30-12 |
| 762-558 | 22-8 |
| 762-559 | 22-7 |
| 762-562 | 22-9 |
| 762-586 | 30-27 |
| 762-587 | 30-14 |
| 762-616 | 62-15 |
| 762-681 | 38-9 |
| 763-063 | 68-4 |
| 763-287 | 22-3 |
| 763-287 | 22-5 |
| 763-450 | 30-25 |
| 764-535 | 68-6 |
| 765-019 | 38-16 |
| 765-217 | 56-1D |
| 765-553 | 38-14 |
| 765-553 | 72-62 |
| 765-648 | 38-10 |
| 766-528 | 60A-23 |
| 766-635 | 31-100 |
| 766-712 | 68-5 |
| 924-450 | 58-24A |

| Part Number | Figure and Index No. |
|---|---|

THIS PAGE INTENTIONALLY LEFT BLANK

**GRIDS 2F20 THRU 2L24**
**THIS PAGE INTENTIONALLY LEFT BLANK**